OWNERS MANUAL

ESSENCE

DAMON
MOTOR COACH

Congratulations on your recent purchase of a Damon Motor Coach Recreational Vehicle. We sincerely thank you for choosing and putting your faith in Damon, and we would like you to know that your satisfaction is of great importance to us. Our major goal is to provide you with a quality recreational vehicle at a reasonable price.

Your unit has been designed to provide you with many years of carefree, comfortable travel and vacationing. We hope that it will bring you that, along with many years of enjoyment and pleasant memories.

This manual will help you better understand the features and operating performances of your recreational vehicle. Please read it and keep it in your vehicle for future reference.

Our customers are extremely important to us, and we want to assure you that we will always strive to do everything possible to continue to earn your trust and goodwill.

Welcome to the wonderful world of RVing and the Damon family.

Happy Travels!

Damon Motor Coach

DAMON
MOTOR COACH

Acknowledgement of Receipt of Warranty/Product Information

IMPORTANT: The customer is required to read this document before signing it.

We have listed several items which will help acquaint you with your new recreation vehicle. You the purchaser, should not submit this form until (1) you have received and reviewed the limited warranty and owners manual;(2) you have had the opportunity to inspect and operate the vehicle;(3) all items have been demonstrated and/or explained to you;(4) the dealer has answered any questions you may have, and ;(5) you find the vehicle in good condition. The dealer is not authorized to deliver this vehicle until this has been done and both you and the dealer have signed this form.

Serial Number:		VIN Number:	
Owner's Last Name:		First:	
Address:			
City:		State:	Zip:
Country:		Phone:	
Owner's E-Mail:		Retail Delivery Date:	

Owner/Dealer Inspection

1. Exterior and interior finish
2. Operate all appliances(electrical and gas)
   a. Furnace and thermostat(lighting and Maintainence)
   b. Range and oven (lightening and maintenance)
   c. Water heater(lighting and maintenance)
   d. Refrigerator(operation and maintenance)
3. Review operation of manual or automatic Propane Gas regulator
4. Operate plumbing facilities including water faucets, shower,and toilet
5. Operate all doors and window's including locks
6. Observe or check to assure that all wheel lugs and tire pressure is correct.
7. Operate 120 Volt Generator (if so equipped)
8. Operate all air conditioner's,radio,entertainment system and televisions(if so equipped)
9. Complete review of owner's manual by dealer w/lowner
10. Test Drive
11. Odometer reading as observed by customer:

Miles or Kilometers

I have completed the above inspection on this recreation vehicle and have taken the test drive at the time of purchase. I noted:

I received and read a copy of the Damon Motor Coach Limited Warranty and the Chassis Limited Warranty before I purchased the vehicle. I understand that it is to be used only for travel on improved roads. I also understand that the selling dealer is not an agent for Damon Motor Coach but is an independent company with no authority to make any representation or promise for Damon Motor Coach.

I acknowledge that the chassis, component parts and appliances that are separately covered by another manufacturer's warranty are excluded from coverage under the Damon Motor Coach Limited Warranty. I understand that this form is for product registration purposes and failure to return this form does not diminish my warranty rights during the warranty period.

Purchaser Signature Date

Dealer Signature Date

The purchaser has: inspected, or been given the opportunity to inspect the vehicle:taken the test drive;supplied the information about his/her name and address;been given the opportunity to make notations in the space provided;observed,or received satisfactory explanations about all items listed above.

Salesperson First Name:	Last Name:	Sales Split:	Salesperson E-mail:
Selling Dealer:		Date:	Transaction Price:

Dealer is to assure this form is properly completed and returned to Damon Motor Coach within fifteen (15) days after delivery.

Return this page to: Damon Motor Coach 2950 Paul Drive - Elkhart, IN 46514

TAPE - PLEASE DO NOT STAPLE

FOLD HERE

PLACE
STAMP
HERE

DAMON MOTOR COACH
CUSTOMER SERVICE DEPARTMENT
PO BOX 2888
ELKHART, IN. 46515-2888

FOLD HERE

TAPE - PLEASE DO NOT STAPLE

Table of Contents

INTRODUCTION
- Introduction 7
- How to use this manual 8
- Reporting Safety Defects 9

WARRANTY - CHAPTER 1
- Damon Limited Warranty 9
- Owner Responsibility 11
- Owner Responsibility Checklist 13
- Major Equipment Suppliers 16

PLANNING AND PREPARATION - CHAPTER 2
- License and Insurance 17
- Inspect and Maintain 17
- Loading and Weight 17
- Controlling the Motorhome 17
- Pre-travel Checklist 18
- Opening Checklist 19
- Weights 20
- Federal Certification Label 21
- Weight Ratings 21
- Capacity 22
- Weighing Your Motorhome 22
- Trailer Hitches and Towing 23
- Towing and GCWR 23

ON THE ROAD SAFETY - CHAPTER 3
- Safety Belts 25
- Fuel System 25
- Parking 26
- Changing Tires 26
- Tire Care 27
- Air Pressure 27

SAFETY PROVISIONS - CHAPTER 4
- Smoke Detector 29
- Fire Extinguisher 29
- Propane Gas Detector 29
- CO Detector 29
- Carbon Monoxide Precautions 30
- Propane Safety 30
- Emergency Exit 30
- Generator Safety 30

HEALTH AND WELL-BEING - CHAPTER 5
- Chemical Sensitivity 33
- Formaldehyde 33
- Ventilation 33
- Smoking 33
- Medical Advice 33
- Tips to Control Condensation 33
- Mold 34
- Prolonged Occupancy 35

PLUMBING SYSTEM - CHAPTER 6
- Water Pump and Filter 37
- Fresh Water Fill / Fresh Water Tank 37
- City Water Hook-up 37
- Low Point Drains 38
- Sanitizing the Fresh Water System 38
- Heated Holding Tanks 39
- Dumping Holding Tanks 39
- Preventing Holding Tank Blockage 40
- Termination Compartment Components 40

TECHNICAL SYSTEM - CHAPTER 7
- Chassis Electrical 41
- Coach Electrical 41
- Converter/Inverter 41
- GFCI 42
- Battery Control Center (BCC) 43
- Generator 43
- Monitor Panel 43
- Roof Air Conditioner 44
- Propane System 44
- Propane Tank 45
- Propane Regulator 45
- Home Theater Programming 46
- Home Theater Operation 47
- Home Theater Troubleshooting Tips 49

INTERIOR SYSTEM - CHAPTER 8
- Automotive Dash 51
- Gear Selector 51
- Dash Board Controls 51
- Symbols of Switches 51
- Steering Wheel 53
- Radio & Components 53
- Temperature Control 53
- Parking Brake 53
- Leveling System 53
- Storage 54
- Living Room Television 54
- Doors and Drawers 54
- Extending the Slideroom 55
- Retracting the Slideroom 55
- Hide-a-bed Sofa 56
- Sofa Bed 56
- Bedroom Door Latch 56
- Day/Night Shade 56
- A/C & Furnace Thermostat 56
- Water Heater Switch 56
- Cabinets & Drawers 56
- Range 57
- Refrigerator 57
- Microwave 57
- Sink 57
- Faucet 57
- Dinette Conversion 58
- Bath Vent 58

Shower Head and Hose 58
Toilet 58
Washer/Dryer 58
EXTERIOR SYSTEMS - CHAPTER 9
Main Entrance 59
Assist Handle 59
Electric Entry Step 59
Compartment Doors 59
Rear Ladder 59
Awning 59
TV and Phone Jacks 60
120 Volt Outlet 60
Power Cord 60
Generator Compartment 60
Furnace Door 60
Water Heater Access 60
Refrigerator Panel 60
Automotive Fuse Block 60
Exterior TV Hook-up 61
Satellite 61
CARE AND MAINTENANCE - CHAPTER 10
Batteries 63
Waste Water System 64
Fresh Water System 64
Electrical System 64
Generator Power System 64
Propane System 65
ABS Plastic Parts 65
Alignment 65
Awning 65
Chassis 66
Doors & Door Locks 66
Exterior Lights 66
Fiberglass 66
Wax 67
Graphics 67
Sidewalls 67
Roof 68
Roof Vents 69
Seals & Adhesives 69
Slideout 69
Tires 70
TV Antenna 70
Underbody 70
Windows 70
Hydraulic Fluid 71
Appliances 71
Bath Fixtures 71
Bathtub Seal 71
Bedspread & Drapes 71
Carpet 71
Countertops 71
Hardware 72
Kitchen Fixtures 72
Mini Blinds & Day/Night Shades 72
Sink 72
Solid Surface Countertop 72
Upholstery & Fabrics 72
Wall Coverings 73
Cabinets 73
Windows 73
WINTER USE AND STORAGE - CHAPTER 11
Water System 75
Food Storage 75
Propane System 75
Heating 75
Condensation 75
Winterization Procedure 75
Water Heater Bypass 77
Winterization Checklist 78
MAINTENANCE SCHEDULE 81
TRAVEL PREPARATION CHECKLIST 82
MAINTENANCE RECORD 83
FUEL / OIL RECORD 85
NOTES 87
TROUBLESHOOTING
Battery Control Center 89
Electrical Power 89
Furnace 89
Generator 90
Leveling Jacks 90
Propane Gas 91
Microwave / Oven 92
Monitor Panel 92
Outside Receptacle 92
Inverter 93
Refrigerator 93
Roof Air Conditioner 94
Slideouts 95
Termination Valve 95
TV Antenna 95
Waste Tank 96
Water Heater 97
Water Pump 97
Water System 97
ELECTRICAL DIAGRAMS 99
INDEX 117

This manual describes many features of your motorhome and provides a guide to operating procedures so that you can obtain the best performance from those features. Your motorhome has been designed to conform with, or exceed, the American National Standards Institute A 119.2, NFPA 1192, CANADIAN CAN/CSA-Z240 RV SERIES-99 (Canadian-built or units built for Canada), and applicable motor vehicle safety standards. These standards establish the plumbing, heating, electrical and other requirements for quality and safety. The seal attached just outside the entry door indicates compliance with these standards. This seal is the outward sign of internal quality.

Like all automotive equipment, your motorhome will require care and regular maintenance in order to retain its maximum performance characteristics. This manual, along with the specific instructions provided by the leading appliance manufacturers, are in your Owner's Information Kit. The Chassis Operator's Manual outlines important areas of service and provides a maintenance schedule. Please follow them carefully to ensure a safe trouble-free service. Study these instructions carefully. A good working knowledge of your unit and how to care for it will help you enjoy many miles and years of recreational living.

If you have any questions regarding operation, maintenance, or service, please contact your dealer immediately so they can assist you. Your dealer's Service or Sales Department is equipped to handle most any problem that may occur. Customer service is of the utmost importance to your dealer and is just as important to the manufacturer. This manual contains a section outlining the warranty and explaining your rights and obligations, as well as the rights and obligations of the dealer and manufacturer, under the terms of the warranty. Please read this section carefully. You will be better informed in case you have a warranty related problem and your dealer will be better able to get you back on the road again in a timely manner.

We sincerely believe that your dealer and the factory representative will be able to solve any problem which may arise. If their combined efforts are not satisfactory, please send a letter describing the circumstances to:

Damon Motor Coach
Customer Service Department
PO Box 2888
Elkhart IN 46515-2888

You must include the dealer's name, model and serial number of your motorhome. The Damon serial number is located on the bottom of the federal sticker, which is located in the driver's compartment area. Thank you for choosing our product. Your dealer and we, the manufacturer, will continually strive to merit your confidence.

⚠ CAUTION Some equipment and features described or shown in this manual may be optional on your model. This instructional manual is of a general nature only. Because of the continuous process of product improvement conducted by Damon Motor Coach, it is possible that recent product changes may not be included in this manual. Specifications may change without notice. This manual is accurate as of the date of publication. The instructions included in this manual are intended as a guide, and in no respect extend the responsibilities of the manufacturing subsidiary, parent company or affiliates beyond the standard written warranty as presented in this manual.

NOTE Photographs or illustrations in this manual are representative of function and may or may not be specific in their depiction of actual equipment, fabrics, interior or exterior decor, or design options as installed on or in your motorhome.

⚠ CAUTION This product is designed to provide temporary living quarters for recreational, camping, or travel. Use of this product for long term or permanent occupancy may lead to premature deterioration of interior finishes, fabrics, carpeting, drapes, or components. Damage or deterioration due to long term occupancy may not be considered normal, and may under the terms of the warranty, constitute misuse, abuse, or neglect, and may therefore reduce or void certain warranty protection.

How to Use This Manual

Your motorhome has been thoroughly inspected before shipment to the dealer. Your selling dealer is responsible for performing a complete pre-delivery inspection of all motorhome components as specified in the pre-delivery checklists supplied by the manufacturer. You should receive a copy of these completed checklists from your dealer when the motorhome is delivered to you.

Should a problem arise, your first step is to contact your selling Damon dealer who will be glad to handle your situation. This Owner's Manual is not intended for use as a service manual, but rather as a guide to help you become familiar with your motorhome.

This manual is not model specific, which means that it is used for a variety of different models that Damon manufactures. It is of a general nature, so the illustrations and descriptions may not be exactly as they are in your particular motorhome.

If you are unclear or unfamiliar with any procedure that is described in this manual, see your Damon dealer for further clarification before proceeding.

Damon Corporation uses the following notations to warn the user of possible safety concerns and to provide information that will prevent personal injury to the user and/or damage to the motorhome.

⚠WARNING A WARNING INDICATES A POTENTIALLY HAZARDOUS SITUATION THAT, IF NOT AVOIDED, MAY RESULT IN DEATH OR SERIOUS INJURY.

⚠CAUTION A CAUTION INDICATES A POTENTIALLY HAZARDOUS SITUATION THAT, IF NOT AVOIDED, MAY RESULT IN MINOR OR MODERATE INJURY.

NOTE A NOTE INDICATES AN INSTRUCTION OR PROCEDURE THAT IS IMPORTANT FOR PROPER SERVICE. A NOTICE CAN ALSO SUPPLY INFORMATION THAT WILL HELP TO MAKE YOUR CAMPING EXPERIENCE MORE PLEASANT.

⚠DANGER A DANGER INDICATES AN IMMINENTLY HAZARDOUS SITUATION THAT, IF NOT AVOIDED, WILL RESULT IN DEATH OR SERIOUS INJURY.

REPORTING SAFETY DEFECTS

If you believe that your vehicle has a defect, which could cause an accident, injury, or death, you should immediately inform the National Highway Traffic Safety Administration (NHTSA) in addition to notifying Damon Motor Coach.

If NHTSA receives similar complaints, it may open an investigation, and if it finds that a safety defect exists in a group of vehicles, it may order a recall and remedy campaign. However, NHTSA cannot become involved in individual problems between you and your dealer or Damon Motor Coach.

To contact NHTSA, you may either call the Vehicle Safety Hotline toll free at 888-327-4236, TTY: 800-424-9153, or write to: Administrator, NHTSA, 1200 New Jersey Avenue S.E., Washington DC, USA 20590. You can go to the NHTSA website, www.safercar.gov. You can also obtain other information about motor vehicle safety from the Hotline.

WHAT THE PERIOD OF COVERAGE IS:

This Limited Warranty provided by Damon Corporation® ("Warrantor") covers those components, assemblies and systems of your new motorhome not excluded under the section "What is Not Covered", when sold by an authorized dealer, for twelve (12) months from the first buyer's retail purchase date or the first 12,000 miles of use, whichever occurs first. However, the skeleton frame structure, only, of the sidewalls (excluding slide outs), roof, and rear and front walls is covered for twenty-four (24) months from the first buyer's retail purchase date or the first 24,000 miles of use, whichever occurs first.

If you purchase or register your new motorhome in a business name or use your motorhome for any rental, commercial or business purposes whatsoever, the Limited Warranty provided by Warrantor covers your new motorhome when sold by an authorized dealer for ninety (90) days from the first buyer's retail purchase date or the first 12,000 miles of use, whichever occurs first; and, the skeleton frame structure, only, of the sidewalls (excluding slide outs), roof, and rear and front walls is covered for twelve (12) months from the first buyer's retail purchase date or the first 12,000 miles of use, whichever occurs first. A conclusive presumption that your motorhome has been used for commercial and/or business purposes arises if you have purchased or registered the motorhome in a business name or have filed a federal or state tax form claiming any business tax benefit related to your ownership of the motorhome.

LIMITATION AND DISCLAIMER OF IMPLIED WARRANTIES:

IMPLIED WARRANTIES, IF ANY, ARISING BY WAY OF STATE LAW, INCLUDING ANY IMPLIED WARRANTY OF MERCHANTABILITY AND ANY IMPLIED WARRANTY OF FITNESS FOR A PARTICULAR PURPOSE, ARE LIMITED IN DURATION TO THE TERM OF THIS LIMITED WARRANTY AND ARE LIMITED IN SCOPE OF COVERAGE TO THOSE PORTIONS OF THE MOTORHOME COVERED BY THIS LIMITED WARRANTY. WARRANTOR DISCLAIMS ALL IMPLIED AND EXPRESS WARRANTIES, INCLUDING THE IMPLIED WARRANTY OF MERCHANTABILITY AND THE IMPLIED WARRANTY OF FITNESS FOR A PARTICULAR PURPOSE, ON COMPONENTS AND APPLIANCES EXCLUDED FROM COVERAGE AS SET FORTH BELOW. There is no warranty of any nature made by Warrantor beyond that contained in this Limited Warranty. No person has authority to enlarge, amend or modify this Limited Warranty. The dealer is not the Warrantor's agent but is an independent entity. Warrantor is not responsible for any undertaking, representation or warranty made by any dealer or other person beyond those expressly set forth in this Limited Warranty. Some states do not allow limitations on how long an implied warranty lasts, so the above limitation may not apply to you.

WHAT THE WARRANTY COVERS:

Warrantor's Limited Warranty covers defects in the manufacture of your motorhome and defects in materials used to manufacture your motorhome. "Defect" means the failure of the motorhome and/or the materials used to assemble the motorhome to conform to Warrantor's design and manufacturing specification and tolerances. See also the section "What the Warranty Does Not Cover" set out below.

WHAT WE WILL DO TO CORRECT PROBLEMS:

Warrantor's sole and exclusive obligation is to repair and/or replace, at its option, any covered defect if: (1) you notify Warrantor or one of its authorized servicing dealers of the defect within the warranty coverage period and within ten (10) days of discovering the defect; and (2) you deliver your Motorhome to Warrantor or Warrantor's authorized servicing dealer at your cost and expense. It is reasonable to expect some service items to occur during the warranty period. The performance of warranty repairs shall not extend the original warranty coverage period. Further, any performance of repairs after the warranty coverage period has expired or any performance of repairs to component parts and appliances

that are excluded from coverage shall be considered “good will” repairs, which shall not alter the express terms of this limited warranty. If the repair or replacement remedy fails to successfully cure a defect after Warrantor received a reasonable opportunity to cure the defect(s), your sole and exclusive remedy shall be limited to Warrantor paying you the cost of having an independent third party perform repairs to the defect(s). Warrantor may use new and/or remanufactured parts and/or components of substantially equal quality to complete any repair. Defects and/or damage to interior and exterior surfaces, trim, upholstery and other appearance items may occur at the factory during manufacture, during delivery of the motorhome to the selling dealer or on the selling dealer’s lot. Normally, any such defect or damage is detected and corrected at the factory or by the selling dealer during the inspection process performed by the Warrantor and the selling dealer. If, however, you discover any such defect or damage when you take delivery of the motorhome, you must notify your dealer or Warrantor within ten days of the date of purchase to have repairs performed to the defect at no cost to you as provided by this Limited Warranty. If two unsuccessful repair attempts have been made to correct any covered defect that you believe substantially impairs the value, use or safety of your motorhome, or repairs to any covered defect(s), which you believe substantially impairs the value, use or safety of your motorhome, have taken 20 or more days to complete, you must, to the extent permitted by law, notify Warrantor directly in writing of the failure to successfully repair the defect(s) so that Warrantor can become directly involved in exercising a final repair attempt for the purpose of performing a successful repair to the identified defect(s).

HOW TO GET SERVICE:

The “Acknowledgement of Receipt of Warranty/Product Information” form must be returned to Warrantor promptly upon purchase to assure proper part replacement and repair of your motorhome. Failure to return the “Acknowledgement of Receipt of Warranty/Product Information” form will not affect your rights under the Limited Warranty so long as you can furnish proof of purchase. For warranty service simply contact one of Warrantor’s authorized service centers for an appointment, then deliver your motorhome (at your expense) to the service center. If you need assistance in locating an authorized warranty service facility, contact Warrantor’s Customer Service Department (1-574- 264-2900). The mailing address is:

P.O. Box 2888
Elkhart, Indiana 46515-2888

WHAT THE WARRANTY DOES NOT COVER:

This Limited Warranty does not cover: any motorhome sold or registered outside of the United States or Canada; items which are added or changed after the motorhome leaves Warrantor’s possession; items that are working as designed but with which you are unhappy with because of the design; normal wear and usage, such as fading or discoloration of fabrics, or the effects of moisture inside the motorhome; defacing, scratching, dents and chips on any surface or fabric of the motorhome, not caused by Warrantor; owner maintenance, including by way of example replacement of wiper blades, bulbs, filters, wheel alignments and resealing exterior sealant areas (see Care and Maintenance Section of Owner’s Manual); the automotive chassis and power train, including, by way of example the engine, drive-train, steering, ride and handling, braking, wheel balance, muffler, tire wear or failure, tubes, batteries and gauges; appliances and components covered by their own manufacturer’s warranty including, by way of example the microwave, refrigerator, ice maker, stove, oven, generator, roof air conditioners, hydraulic jacks, VCR, television(s), water heater, furnace, stereo, radio, compact disc player, washer, dryer, inverter and cellular phone; or flaking, peeling and chips or other defects or damage in or to the exterior or finish caused by rocks or other road hazards, the environment including chemical off-gassing, airborne pollutants, salt, tree sap and hail causing any damage including but not limited to corrosion. Component part and appliance manufacturers issue limited warranties covering those portions of the motorhome not covered by the Limited Warranty issued by Warrantor. To learn more on what specific component parts and appliances are excluded

from the Limited Warranty issued by Warrantor please contact your selling dealership or Warrantor directly or review the warranty packet inside the Motorhome.

EVENTS DISCHARGING WARRANTOR FROM OBLIGATION UNDER WARRANTY:

Misuse or neglect, accidents, unauthorized alteration, failure to provide reasonable and necessary maintenance (see Owner's Manual), damage caused by off road use, collision, fire, theft, vandalism, explosions, overloading in excess of rated capacities, and odometer tampering shall discharge Warrantor from any express or implied warranty obligation to repair any resulting defect.

DISCLAIMER OF CONSEQUENTIAL AND INCIDENTAL DAMAGES:

THE ORIGINAL PURCHASER OF THE MOTORHOME AND ANY PERSON TO WHOM THE MOTORHOME IS TRANSFERRED, AND ANY PERSON WHO IS AN INTENDED OR UNINTENDED USER OR BENEFICIARY OF THE MOTORHOME, SHALL NOT BE ENTITLED TO RECOVER FROM WARRANTOR ANY CONSEQUENTIAL OR INCIDENTAL DAMAGES RESULTING FROM ANY DEFECT IN THE MOTORHOME, INCLUDING BY WAY OF EXAMPLE FUEL AND TRANSPORTATION EXPENSES TO DELIVER THE PRODUCT TO THE SERVICING DEALER, HOTEL ROOMS, LOST WAGES AND MOISTURE DAMAGE SUCH AS MOLD AND MILDEW. THE EXCLUSION OF CONSEQUENTIAL AND INCIDENTAL DAMAGES SHALL BE DEEMED INDEPENDENT OF, AND SHALL SURVIVE, ANY FAILURE OF THE ESSENTIAL PURPOSE OF ANY LIMITED REMEDY. Some states do not allow the exclusion or limitation of consequential or incidental damages, so the above exclusions may not apply to you.

LEGAL REMEDIES:

THIS LIMITED WARRANTY DOES NOT "EXTEND TO FUTURE PERFORMANCE". ANY ACTION TO ENFORCE THIS LIMITED WARRANTY OR ANY IMPLIED WARRANTIES SHALL NOT BE COMMENCED MORE THAN 90 DAYS AFTER THE EXPIRATION OF THE WARRANTY COVERAGE PERIOD DESIGNATED ABOVE. IF YOU USE YOUR MOTOR HOME FOR COMMERCIAL OR BUSINESS PURPOSES, ANY ACTION TO ENFORCE THIS LIMITED WARRANTY OR ANY IMPLIED WARRANTIES SHALL NOT BE COMMENCED MORE THAN ONE YEAR AFTER THE EXPIRATION OF THE WARRANTY COVERAGE PERIOD DESIGNATED ABOVE. THE PERFORMANCE OF REPAIRS SHALL NOT SUSPEND THIS LIMITATIONS PERIOD FROM EXPIRING. Some states do not allow the reduction in the statute of limitations, so the above reduction in the statute of limitations may not apply to you. Warrantor participates in the Consumer Arbitration Program for Recreational Vehicles (CAP-RV). This third-party dispute resolution program is available at no charge to you to settle unresolved warranty disputes. To find out more about the program or to request an application/brochure, please call the Arbitration Administration Office toll free (800) 279-5343. For motorhomes purchased in California, the CAP-RV Program operates under the review of the California Arbitration Program. You must utilize this program before claiming rights conferred by 15 USC Section 2310 (Magnuson Moss Warranty Act) or Civil Code Section 1793.22(b) (Song Beverly Warranty Act). You are not required to use this Program if you choose to seek redress by pursing rights and remedies not conferred by these laws.

THIS WARRANTY GIVES YOU SPECIFIC LEGAL RIGHTS. YOU MAY ALSO HAVE OTHER RIGHTS, WHICH VARY FROM STATE TO STATE.

PRODUCTION CHANGES

Damon reserves the right to make changes in Vehicles built and/or sold by it at any time without incurring any obligations to make the same or similar changes on Vehicles previously built and/or sold by Damon.

OWNER RESPONSIBILITY CHECKLIST

As the proud owner of a Damon Motor Coach, you want to trust that your unit will continue to perform at its peak. To ensure this Damon has provided you this checklist of the responsibilities of the Damon owner. Please make sure that this list is carefully observed and adhered to in order to maintain your Limited Warranty.

Please refer to the Maintenance Schedule (page 81) to determine when your inspections should take place.

BATTERIES

Check both house batteries and chassis battery and tighten connections if necessary. Clean the terminals if necessary. Check to make sure that the batteries have the proper water levels in them, and fill if necessary. Check the charge and recharge if necessary. Keep connections clean and covered with a light coat of grease.

⚠ CAUTION There is a certain danger involved when working with batteries. If you are unfamiliar with these dangers, contact a Damon dealer.

BATTERY REPLACEMENT

Just as in your home, it is the owner's responsibility to periodically check the batteries in the smoke detector, propane detector and carbon monoxide detector when applicable. We recommend that you change the batteries every six months to ensure proper working order.

CONDENSATION

The owner is responsible for checking to ensure that the vehicle has as little condensation in it as possible. The condensation in a motorhome is much greater than in most houses because the insulated walls of the vehicle are much thinner than house walls, and the small size and tight construction of the vehicle allow a quick buildup of high moisture levels in the inside air.

This can be reduced by always keeping the bathroom door closed and the window or vents open when bathing, and for a period of time when you have finished bathing or cooking, to allow for dissipation of all the moisture. Use your vent hood and fan when cooking. Don't hang wet clothes in your unit to dry. When left for prolonged periods of time, condensation can cause considerable damage to your vehicle.

EXTERIOR/INTERIOR

Most exterior parts of your motorhome are made of fiberglass, which is a very durable material, but not indestructible. Exposure to the elements can cause premature deterioration without routine maintenance, especially in hotter climates. The effects may be; fading, yellowing, or chalking, however these are surface cosmetic changes, which do not affect the strength of your unit. Simple maintenance through cleaning by washing and waxing will ensure lasting beauty.

The same fading may occur to carpeting and upholstering. Be sure to keep your shades down in extremely sunny locations and maintain proper cleaning techniques for both carpet and upholstery.

BATTERY REPLACEMENT

The front suspension and steering system of this vehicle was factory aligned using highly accurate equipment prior to delivery to the dealership. We recommend that the alignment is checked after you have fully loaded the motorhome according to your personal needs. If necessary, adjust alignment for the loaded motorhome. Thereafter, the alignment should be inspected yearly to help prevent uneven tire wear.

POTABLE TANK

Sanitize the fresh water system at least once per year or whenever the motorhome is unused for prolonged periods of time (see page 38). This will help keep your water system fresh and discourage the growth of bacteria that can contaminate the water supply. Make sure that the tanks are properly treated with the right chemicals for disinfection.

PROPER LOAD BALANCE

Your motorhome is built to withstand a certain maximum load. Check the amount listed on the Federal Certification Label in the driver's area of your motorhome to determine safe load limits. NEVER OVERLOAD THE MOTORHOME. Reference pages 17, 22 and 23 for proper loading and weight distribution.

SEALANTS

Weatherproofing sealants are used around the doors, windows, vents, and joints during construction of your motorhome. These sealants are subject to deterioration from exposure, and must be checked periodically to assure the weatherproof integrity of your unit. If evidence of cracking or voids in the sealants is apparent, have your dealer reseal these areas. Proper sealant coverage should be checked and resealed at least once every six months. Please see Chapter 10 - "Care and Maintenance" for instructions on properly sealing the roof area. Failure or neglect of proper sealant maintenance could result in leakage, and may reduce or void your warranty protection.

SERVICE CALLS

It is important that the owner realize that Damon's Limited Warranty covers warrantable repairs that are performed by an authorized Damon dealer at their service center or facility only. If you are unable to bring your unit in for repairs, Damon is not responsible for the cost of the actual service call charged to come out to your unit.

SLIDEOUT LUBRICATION

If your slide-out system becomes squeaky or makes any noises while operating, it is permissible to apply a coat of lightweight oil to the drive shaft and roller areas located below the main floor. Remove any excess oil so dirt and debris cannot build up.

STEP LUBRICATION

To maintain the integrity of the retractable step in your motorhome, you must periodically inspect it for rust or damage, also see that it is lubricated to function safely and to ensure proper working order.

TIRE PRESSURE

The owner is responsible for maintaining proper tire pressure in the vehicle's tires. Check the tire specifications on the Federal Certification Label located in the driver's area for the proper pressure. You will ensure optimum driving standards by keeping your vehicle maintained.

TRAVEL BARS

Never forget to remove your travel bars from your slide-out prior to opening. Failure to do so could result in severe damage to yourself and/or your motorhome, which will not be covered under the Limited Warranty.

WINDSHIELDS

Like most cars, your motorhome's windshield is not covered under the Limited Warranty. Items such as cracks, stone chips and holes are regarded as normal wear and tear, and will not be considered as a manufacturing defect.

WINTERIZATION

Please make sure that your vehicle is properly winterized before long periods of storage. To find a complete listing of the winterization procedures, refer to this manual's section called "Winterization Procedures" (page 75). Failure to properly winterize your vehicle may result in damage to your motorhome which would not be covered under the Limited Warranty.

SUPPLIERS PROVIDING SEPARATE WARRANTIES

Please read your recreational vehicle warranty carefully. It is very important to know what Damon Motor Coach warrants, and what is warranted by other suppliers' warranties. Damon Motor Coach does not warrant some items within your vehicle. Below you will find a list of manufacturers who can help you with these components. Please contact them should a need arise.

ABC Marketing / Automotive Lights	574-293-9399
ACME / Dash Air Conditioning	800-552-2263
ASA / Audiovox / Backup Monitor & Bedroom Radio	800-688-3135
ATC / Switches	574-262-1258
Atwood / Water Heater & Furnace & Entry Door	815-877-5700
Auto Motion / Front Shades	905-470-6198
Bob Gunn / Velvac / ADTH / Wexco / Exterior Mirrors & Backup Monitor & Camera & Wipers	574-262-2518
Bristol Laminating / Corian / Countertops	574-848-4461
Carrier Transport / Roof Air Conditioning	800-450-2211
Cass Hudson / Dream Table Components	800-423-1511
Coachstep / Electric Step	800-451-9245
CTD / TV / Dash Radio	800-777-4856
Dometic / Awning & Central Vacuum	574-294-2511
Fantastic Vent / Air Vent & Air Vent with Rain Sensor	800-521-0298
Flair International / Furniture	574-295-5688
Flexsteel / Furniture	563-556-7730
Hehr / Windows	517-845-3061
Hoosier Wood / Freestanding Dinette / Buffet / Folding Chairs	574-534-4474
Intellitec / Battery Control Center	630-268-0010
King Control / Satellite	800-982-9920
Lippert Components / Slideouts & Leveling Systems	574-537-8900
Midwest Sales / Microwave	574-287-3385
Norco / Slideouts	574-262-3400
Norcold / Refrigerators	800-752-8654
Odyssey Group / TV's	574-848-2277
Onan / Generator	800-888-6626
Progressive Dynamics / Converters / Transfer Switches	269-781-4241
Proto Fab / Dash & Hallway Panels & Components	574-522-4245
Putnam / Hitch	517-369-2165
Sealand / Toilet	800-321-9886
Shaw Industries / Carpet	574-264-9687
Shurflo / Water Pump	800-762-8094
Thetford / Toilet (Michigan Residents 313-769-6000)	800-521-3032
Westland Sales / Washer/Dryer	800-356-0766
Winegard / TV Antenna & Video Switch	319-753-0121

This list may not be all inclusive. If you have any questions regarding other components, call Damon Customer Service at 574-264-2900. A complete listing of all your unit's appliances along with their corresponding serial numbers is located on the wall inside your wardrobe. Please refer to this list if you need to contact the manufacturer regarding the appliance.

READ THE BOOK

A thorough working knowledge of your motorhome is important if you are going to get the most out of the convenience and safety items built into your unit. Be as familiar with it as you are with your personal car or truck. Study all the booklets included in your Owner's Information Kit. These booklets cover details of operation for the major appliances and equipment built into your motorhome for your comfort, convenience and safety. Your selling dealer should provide you with a complete walk through of your vehicle at the time of purchase. Any questions and concerns should be addressed at that time.

LICENSES

The vehicle licensing laws vary from state-to-state. Check with your state license bureau or nearest branch office for the requirements of your state. Be sure to renew your license if it has expired or will expire during your trip. Your motorhome is considerably larger and heavier than your car, therefore certain precautions should be exercised. A CDL license may not be required to operate your motorhome, but Damon Motor Coach recommends you attend a CDL class to better understand the motorhomes driving and handling characteristics. Damon Motor Coach wants your driving experience to be pleasant and enjoyable.

INSURANCE

Talk to your insurance agent about the appropriate coverage for your motorhome. Always carry your policy card.

INSPECT AND MAINTAIN

Follow a consistent schedule of inspection and maintenance for your motorhome. Your continuing safety and comfort depend on it. This manual includes recommended maintenance intervals and instructions. Adherence to these schedules will minimize the possibility of failure of any important system or part of your motorhome. The time spent inspecting and maintaining your motorhome will provide you with many years of recreational pleasure. Improper inspections or maintenance neglect may invalidate your Limited Warranty.

LOADING AND WEIGHT DISTRIBUTION

Proper loading is one of the most important considerations when traveling in a motorhome. Your motorhome is built to withstand a certain maximum load. Check the Federal Certification Label located in the driver's area to determine the safe load limits. For safety's sake, NEVER OVERLOAD THE MOTORHOME. This chapter contains information about proper loading and weighing of your motorhome.

CONTROL OF THE MOTORHOME

Know how to control your motorhome on the highway. Be familiar with passing and stopping requirements, and problems that can develop. Know how to brake properly, how to back up and how to turn. Practice in a secluded place until you become familiar with the handling characteristics and techniques of your motorhome. Don't overlook the laws of your state that govern driving a motorhome. Your state Motor Vehicle Department office can provide you with the applicable vehicle codes that spell out your rights and responsibilities as a motorhome owner.

PRE-TRAVEL CHECK

Whenever you depart, be it from your home, rest area, or campsite. You should perform these pre-travel checks:

TIRES Should be inspected before each trip for uneven wear, road damage, foreign objects, peeling or bulging, and correct tire pressure. Heat generated by surface friction will increase the tire's air pressure, therefore do not bleed air out of a hot tire. Check tire pressure after the vehicle has been parked for at least one hour. Inflate tires to recommended pressure as indicated on the Federal Certification Label located above the Drivers area. (See maintenance schedule on page 81.)

⚠ CAUTION Proper tire inflation is extremely important.

⚠ CAUTION When purchasing a new tire, be certain it is the same size and has the same ply rating and load range as the original tire. DO NOT mix radial ply with bias or bias-belted tires.

WHEEL LUGS Must be tightened to the specifications in the Chassis Manufacturer's Owner's Manual.

WINDSHIELD Should be clean, wiper blades inspected, and windshield washer reservoir filled.

LIGHTS Should be tested, including brake lights, warning flashers, clearance lights, tail lights, turn signals and headlights. Clean all lens covers.

REARVIEW MIRROR Should be adjusted so the driver can see to the rear on both the right and left side of the unit.

POWER CORD (120 Volt shoreline) must be unplugged from the external source and properly stored for transit, also making sure the cord hatch is secured.

WATER FILL Hoses must be disconnected, properly drained and stored, and the caps and hatches secured. Fill the fresh water tank as required prior to storing hoses.

SEWAGE Should be emptied from the holding tanks before traveling. Termination valves must be closed and locked. The sewer hose must be removed from the termination valve outlet and stored. Termination cap must be securely fastened to the termination outlet.

ENTRY STEP Must be returned to its travel position. Pay special attention to this every time you move your unit. Severe damage may result if not retracted during transit.

PROPANE TANK Levels at the monitor panel should be checked, and gas line connections should be checked for leaks.

⚠ CAUTION Some states prohibit vehicles equipped with propane tanks from using tunnels. A few other states prohibit traveling with the service valve open and the pilot lights lit. Check the regulation of the states through which you intend to travel.

DOORS AND DRAWERS Should be closed and secured. Loose items should be secured or stored away.

⚠ CAUTION Be sure all loose items are secured or properly stored while the vehicle is in motion. Possible overlooked items may include canned goods, small appliances (on countertop), cooking pans (on range), or free standing furniture. These items could become dangerous projectiles during a sudden stop.

For storage and equipment should be closed and locked, also making sure that loose items are secured or stored for transit.

COMPARTMENT DOORS

Door should be secured with the travel latch, and the items inside made ready for transit.

REFRIGERATOR DOOR

Should be closed and secured or adjusted as desired.

WINDOWS AND VENTS

OPENING CHECKLIST

If the motorhome was properly and carefully prepared for storage, taking it out of storage will not be difficult. The following checklist assumes that you stored your RV with care. If you didn't, and extensive freeze damage or other serious deterioration has occurred, consult your dealer or an authorized service center for advice.

- Thoroughly inspect the outside of your RV. Look for animal's nests in wheel wells, in engine, air cleaner, or in other out of the way places. Clean all appliance exhaust vents, ceiling vents and air conditioning covers.
- Changing the wiper blades on your motorhome is similar to your car. Remove the screw, take off the old blade, and replace with a similar style and length blade. Lubricating pivot points with thin lubricating oil is also recommended.
- Check that all furnace, water heater and refrigerator openings are free of debris, insect nests, webs, etc.
- Open all doors and compartments. Check for animal or insect intrusion, water damage, or other deterioration.
- Check charge level in batteries. Refill with distilled water and recharge if necessary. Reinstall batteries if necessary. Be sure cable ends and terminals are clean and free of corrosion. Turn the Battery Disconnect Switch off if applicable.
- Check tire pressure. Inflate to the specified cold pressure.
- Remove coverings from windows if necessary.
- Open vents and windows for ventilation.
- Drain, flush and sanitize the fresh water system. (See Chapter 6 - "Plumbing Systems") Inspect drain lines for leaks. Replace if necessary. Do not try to repair, as this is usually ineffective.
- Install a new water filter (if your unit is equipped with this).
- Operate all faucets and fixtures in the fresh water system. Check for leaks at all joints and fittings. Repair if necessary.
- Check 12 Volt circuit breakers and inspect all fuses.
- Operate all 12 Volt lights and accessories.
- Install new batteries in battery operated devices.

- Test propane, smoke and carbon monoxide detectors. Replace the batteries if necessary.
- Check the monitor panel operation.
- Open and operate all vents and vent fans. Remove any outside coverings if applicable.
- Inspect 120 Volt electrical system which includes power cord, converter, all outlets and exposed wiring. If defects are found, consult your servicing dealer or an authorized service center.
- Operate 120 Volt appliances and air conditioner (s). Be sure to uncover air conditioner shroud(s).
- Inspect the propane system and check for leaks. If propane tank shows signs of rust or corrosion, have it inspected by a qualified propane technician. Refill if necessary.
- Operate each propane appliance. Observe all burner/pilot flames for proper color and size.
- If necessary, have propane regulator adjusted for proper pressure by a qualified technician.
- Check sealants around all roof and body seams and windows. Reseal if necessary.
- Lubricate all exterior locks, hinges, and latches.
- Wash and wax exterior. Inspect body for scratches or other damage. Touch up or repair as necessary. Flush underside of the motorhome thoroughly.
- Check all the chassis fluid levels including engine oil, coolant, power steering fluid, brake fluid, transmission, rear axle oil and washer fluid. Top off if necessary.
- Check all exterior lights; clearance, brake, turn, and reverse should be fully functional.

Your motorhome should be ready for a new traveling season. Your dealer can check your preparation and correct any defects or make any necessary adjustments.

These items are the absolute minimum requirements necessary for pre-travel.

WEIGHTS

A motorhome chassis (springs, wheels, tires, axles, and frame) is designed to carry a certain maximum load. This load includes everything; the weight of the empty motorhome itself, occupants, your belongings, fuel, fresh water, waste water and anything else that may be in or attached to the motorhome.

FEDERAL CERTIFICATION LABEL

The Federal Certification Label, found in the driver's area, is installed in the vehicle as required by federal standards. It contains information that will be helpful in determining proper loading. The label will also list the date of manufacture, (GCWR), (GVWR), (GAWR) (Front and Rear), tire size, rim size, tire pressure (PSI), Vehicle Identification Number (VIN), and the type of unit.

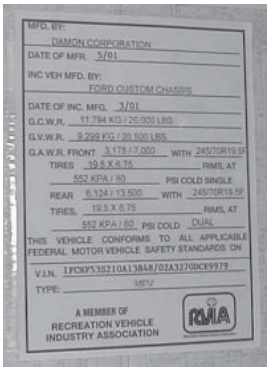

FEDERAL WEIGHT LABEL

The Federal Weight Label, found on the entrance door and in the driver's area, is installed in the vehicle as required by federal standards. It contains the Occupant and Cargo Carrying Capacity (OCCC). The label will also list the Vechicle Identification Number (VIN), the seat belt equipped seating capacity and the weight of a full load of fresh water.

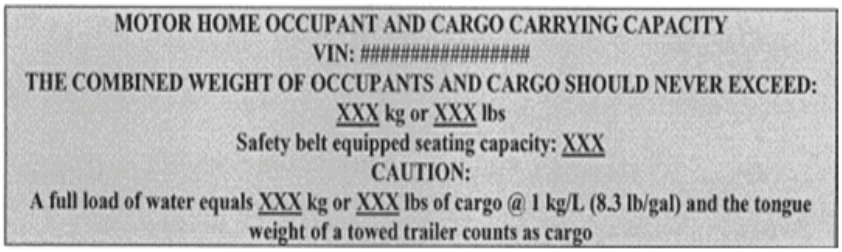

WEIGHT RATINGS

GROSS VEHICLE WEIGHT RATING (GVWR) is the maximum permissible weight of this fully loaded motorhome.

UNLOADED VEHICLE WEIGHT (UVW) is the weight of this motorhome as manufactured at the factory with full fuel, engine oil, coolants and propane.

OCCUPANT and CARGO CARRYING CAPACITY (OCCC) is equal to the GVWR minus the UVW.

⚠ CAUTION Dealer installed equipment and towed vehicle tongue weight will reduce OCCC.

GROSS AXLE WEIGHT RATING (GAWR) is the maximum weight a specific axle is designed to carry. Each axle has its own GAWR.

These ratings are shown on the RVIA Weight Label. They are the MAXIMUMS for a fully loaded vehicle. You must compare the GVWR and the GAWR to the actual loaded weight of your motorhome and make adjustments if necessary. (See page 21) The GAWRs do not necessarily add up to the GVWR.

⚠WARNING Neither the axle loads nor the vehicle loads must ever exceed their respective maximum weight ratings.

A properly loaded vehicle is safer and easier to drive. Distribute your cargo evenly from side-to-side and front-to-back. Heavier items should be stowed on or near the floor and be as centrally located as possible. They should be secured so they cannot slide during a panic stop causing damage. Lighter items can be stored in overhead cabinets. Remember to leave space and weight allowance for souvenirs and other items you may purchase during your travels. A properly loaded vehicle can help you conserve fuel and prevent excessive wear on your vehicle's automotive system.

CAPACITY

During the design and development of your motorhome, the number and size of storage compartments, the liquid tank capacities and the number of Designated Seating Positions are maximized for value and convenience. If the motorhome operator fills all liquid tanks to capacity, fills all storage compartments and cupboards to maximum volume and fills all available, assigned seating positions with passengers, the motorhome could be overloaded. Please use the Recreational Vehicle Industry Association's figures shown below to help you to determine your weights.

- Average vehicle occupant = 150 pounds (68 kilograms)
- One gallon diesel fuel = 7 lbs (3.2 kilograms)
- One gallon of water = 8.3 lbs (3.8 kilograms)
- One gallon of propane = 4.5 lbs (2 kilograms)

The operator is responsible for analyzing the conditions in which the motorhome will be utilized for each trip. The number of passengers and placement of cargo can affect the amount of water capacity that you carry. A smaller passenger capacity for camping provides reasonable cargo capacity for trips taking more than one day. A larger passenger capacity for day use provides less cargo capacity for trips or activities not involving overnight stays. It may be necessary to reduce the amount of water carried and unload some cargo items normally carried for camping in order to provide carrying capacity for the additional day use passengers.

WEIGHING YOUR LOADED MOTORHOME

Reading 1

Reading 2

Reading 3

1. Drive the front wheels onto the scale platform and take a reading. This is the front Gross Axle Weight. (Reading 1).
2. Drive the entire vehicle (all axles) onto the scale and take a reading. This is the Gross Vehicle Weight. (Reading 2).
3. Drive forward until only the rear axle is on the platform and take a reading. This reading is the rear Gross Axle Weight. (Reading 3).
4. Compare reading 2 with the GVWR (Gross Vehicle Weight Rating) of your vehicle located on the Federal Certification Label. If the reading exceeds the GVWR rating, you will have to reduce the total vehicle load.

5. Check readings 1 and 3 to verify that each is less than the GAWR (Gross Axle Weight Rating) on the certification label. If either exceeds the GAWR for the axle(s), redistribute enough of the load to ensure that loads on the front and rear axle(s) are within the required limit.

⚠WARNING Do not exceed the gross axle weight ratings of any axle. Do not exceed the maximum hitch weight rating. Do not exceed the gross vehicle weight rating of either the motorhome or the towed vehicle. Do not exceed the gross combined weight rating of the motorhome. Exceeding any of these ratings may cause unstable driving and handling characteristics, damage to your motorhome chassis or towed vehicle and may void your warranty protection.

GROSS COMBINED WEIGHT RATING (GCWR): is the maximum loaded weight of this motorhome and any towed trailer or towed vehicle. See the chart located on the Federal Certification Label located in the driver's area to determine the GCWR rate for your vehicle.

GROSS COMBINED WEIGHT (GCW): is the total weight (including driver, passengers, all cargo, fuels, and fluids) of the motorhome and the towed vehicle combined. Compare the GCW with the GCWR. If the GCW is greater then the GCWR, then weight must be eliminated until scale weights are equal to or less than the proper ratings.

WEIGHT DISTRIBUTION

The distribution of weight in your motorhome is a very important factor. Too much weight either on one side of the vehicle or too much weight in the rear compared to the front can adversely affect the handling characteristics of the vehicle, and in some cases can result in overloading the tires or axle components. When loading, you should evenly distribute the weight to ensure the axle weight is equal to or less than GAWR (Gross Axle Weight Rating) indicated on your Federal Certification Label.

This type of balance provides the best handling characteristics of the vehicle. Small percentage differences will not make a great deal of difference. A unit that is too light on the front axle and too heavy on the rear axle can result in steering difficulties.

By knowing what your vehicle weighs, you can determine the best location for your belongings. Simply because you can fit everything in one compartment for easy access, does not mean that this is the best place for an item. Your home is now moving down the road, so the little things like location of heavy items become important from more than an accessibility standpoint.

TRAILER HITCHES AND TOWING

If you expect to pull a vehicle or trailer with your motorhome, please use these guidelines when choosing a vehicle or trailer:

1.) Do not load over the weight indicated on the label on the hitch.

2.) Hitch Classification: Class III and IV = See the label on the hitch to find your maximum hitch weight and towing weight.

3.) Vehicle/Trailer weight: Do not tow a vehicle/trailer weight more than recommended by the class rating of your hitch, or more than recommended by the chassis manufacturer, whichever is less. The

motorhomes braking system is rated for operation at the total GVWR (Gross Vehicle Weight Rating) of the motorhome.

⚠WARNING For your safety, Damon Corporation recommends that a separate functional braking system be used on any towed trailer or vehicle, including those dolly towed or towbar towed.

If you plan to tow a vehicle or trailer with your motorhome, the tongue weight must not exceed the maximum allowed hitch weight. The Gross Combined Vehicle Weight must not exceed the GCWR (Gross Combined Weight Rating) of your chassis. To determine how much weight your motorhome can tow, have your vehicle weighed when it is properly loaded, as you would have it when you are ready to depart for your trip. Subtract this total weight from the GCWR (Gross Combined Weight Rating) weight on your Federal Certification Label. This difference is the total amount that you may safely tow behind your motorhome.

⚠WARNING This Combined Vehicle Weight cannot exceed your Motorhomes specific GCWR.

Example: If you have a GVWR of 32,000 lbs., and your unit weighs 27,522 lbs.:

GVWR=	32,000 lbs.
Subtract Unit weight=	27,522 lbs.
	4,478 lbs.

Total of 4,465 lbs available for cargo in the motorhome providing you DO NOT overload the individual GAWR's.

Example: If you have a GCWR of 42,000 lbs., and your unit is fully loaded to its maximum GVWR of 32,000 lbs.:

GCWR=	42,000 lbs.
GVWR=	32,000 lbs.
	10,000 lbs.

Total of 6,000 lbs available to tow a vehicle or trailer behind the motorhome. This will be the MAXIMUM weight your unit is certified by the chassis manufacturer to safely pull. DO NOT exceed the ratings of the label on the hitch or the GCWR of the chassis.

SAFETY BELTS

Seat belts are an important safety feature of your vehicle. Each designated seat is designed to carry passengers while the vehicle is in motion. Each Designated Seating Position is equipped with either a type 1 (lap belt) or a type 2. (shoulder and lap belt) The number of seats equipped with seat belts is to provide a choice of seating locations. This does not necessarily mean that you may safely carry that many passengers. Refer to “Cargo Carrying Capacity” (page 21) in the loading section for proper loading techniques.

To adjust your seat belt:

- Pivot the buckle at a right angle to the belt and pull to the desired length.
- Make sure the belt is not twisted, and press the tongue end into the buckle end. Be sure the two are latched together, and adjust the belt snugly around your abdomen.
- To release, simply depress the button on the buckle and remove the tongue.

Child restraint seats may be used with the lap belts provided. Check the restraint seat instructions for proper installation and adjusting. Child restraint seats are required to a certain age. Check with the states in which you will be traveling for the proper age requirements.

⚠WARNING While the motorhome is in motion, passengers should be seated with seat belts fastened. Do not allow passengers to occupy any position that is not equipped with a seat belt.

FUEL SYSTEM

Use only recommended fuel as specified by the chassis manufacturer. Do not overfill the fuel tank, but allow for expansion of fuel (caused by rising temperatures) by stopping the filling process when the pump automatically shuts off.

⚠CAUTION Modern fuel systems may build up vapor pressure within the tank as the fuel warms during use, or in hot weather. Under certain conditions, sudden release of this pressure when removing the filler cap can spray fuel from the opening, causing a possible hazard. When removing the filler cap, rotate it slowly, only far enough to allow pressure to release. After any hissing sounds die down, complete the removal of the cap. To protect the gasoline system from excessive pressure or vacuum, or from sudden release of pressure, replace lost caps with caps of the same design available from your motorhome dealer.

DRIVING

When driving your motorhome, you’re driving a large vehicle, and you should become accustomed to the feel of the controls and the reference points from the driver’s seat. Become familiar with the position of the motorhome in traffic, and be cautious while maneuvering to allow for the length and width of the vehicle. Always allow extra room to corner and to change lanes. Learn to use the side mirrors to view the road behind. Check them often.

Drive with consideration on the highway, observing all speed and safety regulations. The best cruising speed of your motorhome will vary with road and weather conditions. Remember that your motorhome is heavier than a car, making it less maneuverable and harder to stop. Brake pedal pressure and travel may vary significantly from that of a car. Be prepared to brake earlier than you normally would a car. Also, because of its greater side surface area, it is more easily affected by cross winds. Allow extra distances for

passing and stopping, and drive at a moderate speed, particularly in traffic and in gusty wind conditions.

Driving on winding or mountain roads is not difficult if done with reasonable care. Observe proper vehicle speeds when ascending or descending hills and always operate in the proper transmission range. Downshift on hills to avoid overheating or undue engine loads. Downshift before descending grades.

Road conditions, terrain, weather, and other driving factors are sometimes unpredictable, and mountain driving or desert temperatures can put extreme demands on drive train components, especially the transmission. Under extreme heat conditions you may need to turn off the vehicle air conditioner to improve engine and transmission cooling.

Allow for the extra height of your motorhome and avoid areas having low overhead clearance. Check for low hanging tree branches or other obstructions wherever you drive or park. Avoid low roof heights when pulling in for service. This may be particularly important if you drive with the overhead vents open or if the motorhome is equipped with a roof air conditioner, roof rack, or TV/radio antenna. Check the total height for your particular motorhome and make sure that you are aware of it when driving under bridges or underpasses.

PARKING

When parking parallel to a curb, be sure to allow for poles or obstructions as the front and rear portions of the motorhome will swing wider than an automobile. Remember that your motorhome is larger than your automobile and will require more space. Be careful your unit does not occupy road space or block driveways while parking. When parking on an incline, turn the front wheels into the curb in the direction of the roll to aid the parking brake. Always set the parking brake when parking.

CHANGING TIRES

Changing a tire on a motorhome is more difficult than an ordinary automobile. Motorhome tires are larger and heavier than ordinary tires. Whenever possible, call for roadside assistance to help you in changing your tires. This task should not be done alone due to the weight of the unit. Motorhomes are extremely heavy. Changing a flat tire is best left to a professional mechanic with the proper equipment.

If absolutely necessary, change the tire on a level and firm surface. If you are on the roadside, activate the vehicle's hazard warning flashers. Apply the parking brake. Set up flares and or warning lights. See the chassis manufacturer's owner's manual for specific jacking and tire removal, and replacement instructions, which pertain to your unit. Lug nuts vary from chassis to chassis, and the GVW (Gross Vehicle Weight) of your motorhome. (See Chassis Owner's Manual for specific instructions on tightening lug nuts). After operating 50-100 miles, retighten to the same specification. If you don't have proper equipment, stop at the nearest service facility and have the torque of the lug nuts checked.

⚠WARNING Never place the jack under a bumper or under the edge of the sidewall. Always place the jack as specified by the chassis owner's manual. Never use the rear differential as a jacking point. Use the jack only for changing tires. NEVER get underneath the vehicle when using the jack; never start or run the engine while the vehicle is on the jack.

TIRE CARE

The most important factor in maximizing the life of your tires is maintaining proper inflation pressure. An under inflated tire will build up excessive heat that may go beyond the prescribed limits of endurance of the rubber and the radial cords. Over inflation will reduce the tire's footprint on the road, reducing the traction, braking capacity, and handling of your vehicle. An over inflated tire will also cause a harsh ride and uneven tire wear.

CHECK AIR PRESSURE

To determine the correct air pressure for your tires, load your motorhome as you would normally for travel, including water and fuel. Determine the correct air pressure for the weight on each axle and adjust the pressure according to the Federal Certification Label when the tires are cool or have not been driven for more than one mile. Never reduce the air pressure in a hot tire.

⚠CAUTION Never let air out of a hot tire.

Now that you have found what the correct air pressure per axle needs to be for your motorhome when loaded, you need to know when to check your air pressure. You should check the air pressure every two weeks or at least once a month and before any major trip. Your motorhome's air pressure should be checked every morning on long trips. On short trips of a day or less of driving each way, your tires should be checked before you start your trip home. If your vehicle is stored for any length of time, the air pressure should be checked prior to storage, but more importantly, when it comes out of storage.

Check your tires when they are "cold" and have not been driven for more than one mile. The stated load capacity for a given cold inflation pressure is based on ambient outside temperature.

To maintain the inflation pressure in your tires you will need the proper equipment. It is recommended that you purchase a quality truck tire air gauge, which has an angled dual head. This type of gauge allows you to check inflation on the inner dual wheel which has the valve stem pointed away from you. Nothing should restrict your ability to check your tire's air pressure daily when you are driving your motorhome. Pressure sealing valve caps should always be used to prevent air from escaping from the valve stem. If you use valve stem extension hoses, make sure they are good quality stainless steel braid reinforced, and are securely anchored to the outer wheel. If your motorhome has wheel covers which must be removed to check the inflation, then consider removing them as the extra time and effort required may lead you to avoid checking your pressure.

⚠WARNING When replacing your tires always make sure the proper size and rating is used. Check the federal certificate located in the drivers area for your model's specific size and rating.

⚠CAUTION In a sudden stop or collision, loose equipment could strike someone. Storing a jack, a tire, or other equipment in the passenger compartment of the vehicle could cause injury. Store and secure all of these items in a proper place.

NOTE Damon does not provide jacks with our motorhomes.

Your motorhome has been supplied with various safety features and equipment for your convenience and for safe operation. As with all areas in life, the chance for accidents is possible, and the recreational life-style is no exception. Please take the time to familiarize yourself with the safety features of your motorhome now to prevent any question of how they are used if an emergency should arise.

SMOKE DETECTOR

Please refer to the smoke detector manual in the Owner's Information Kit for operating instructions.

⚠WARNING Test smoke detector operation after vehicle has been in storage, before each trip, and at least once per week during use. Replace battery every six months.

⚠WARNING The motorhome should never be operated or occupied unless the smoke detector is present and functioning properly.

FIRE EXTINGUISHER

Each motorhome is equipped with a portable fire extinguisher mounted close to the main entry door. This fire extinguisher is rated for Class B (gasoline, grease, flammable liquids) and Class C (electrical) fires. Test your extinguisher as recommended by the fire extinguisher manufacturer, and replace after use. Be familiar with your fire extinguisher location and its operation.

PROPANE GAS DETECTOR

An propane detector, located near the floor in the galley area, will sense the presence of propane leakage. The leak detector will sound an alarm if propane is detected. Test the leak detector weekly.

The propane detector gets its power from one of the circuits in the load center. Because these circuits are on the load side of the battery-disconnect, the propane detector will be disabled (along with all other 12 Volt house powered devices) when shore power is removed and the battery disconnect is in the storage mode. While this is ideal when your coach is in storage and the propane system is shutdown, there will be no warning if this should happen while camping and an propane leak occurs. To warn you of this possible hazard, a label is located near the propane leak detector.

⚠WARNING The propane detector is operated by the 12 Volt house wiring and will be disabled when batteries are in the storage mode and shore power is removed.

⚠WARNING The motorhome should never be operated or occupied unless the propane detector is present and functioning properly.

CO DETECTOR

A carbon monoxide detector is installed in each vehicle. It is usually located on the bedroom or hall wall about five feet from the floor. Test it before every trip to ensure that it is functioning properly.

Carbon monoxide is a colorless, tasteless, odorless gas. It is a by-product of combustion in the engine, generator and propane appliances. The engines in your motorhome and generator system produce it constantly while they are running. CARBON MONOXIDE IS DEADLY. Please read and understand the following precautions to protect yourself and others from the effects of carbon monoxide poisoning.

CO SAFETY PRECAUTIONS

⚠WARNING Exhaust gases are deadly. Do not block the tail pipe or situate your vehicle or propane appliance exhaust systems in a place where the exhaust gases have any possibility of accumulating either outside, underneath, or inside your vehicle or any nearby vehicles. Outside air movements can carry exhaust gases inside the vehicle through windows or other openings remote from the exhaust outlet. Operate the engine only when safe dispersion of exhaust gases can be assured.

⚠WARNING The motorhome should never be operated or occupied unless the CO Detector is present and functioning properly. Do not under any circumstances operate the vehicle or generator engine while sleeping.

BATTERY INSTALLATION

The carbon monoxide detector is installed without batteries. To install the batteries, press the tab at the top of the CO detector and slide the detector upwards. Open the battery compartment door by hinging the left lower side downward. This exposes the battery compartment. Install the batteries as indicated. The detector should beep indicating correct installation. Reverse the above procedure to reinstall the detector. Test the detector before you start every trip.

PROPANE SAFETY

When lighting your propane appliances for the first time, or after refueling the propane tank, trapped air will need to be purged from the system which could take a few seconds or a few minutes, depending on the distance of the appliance from the tank. Follow the appliance manufacturer's lighting and operating instructions found in the Owner's Information Kit. Be sure that the water heater has water in it prior to igniting.

EXIT LOCATIONS

Every sleeping area in your recreational vehicle is provided with exits. These exits are either in the form of an exit window (which will be labeled EXIT in red letters) or the main entry door, which is not labeled, serves as an exit. The exit window handles will also be red in color. Lift the handles and push the window open to exit. Make sure all occupants are aware of the exit locations and their operation.

NOTE Make sure to read and understand the generator owner's manual before operating the generator. Observe all operating instructions and warnings as well as all recommended maintenance schedules and procedures.

GENERATOR

The onboard generator makes your RV fully self-contained. It allows you access to 120 volts when there is no shore power available, but keep in mind that carbon monoxide is deadly! Never sleep in the RV while the generator is running! Before you start and use the generator inspect the exhaust system. Do not use it if the exhaust system is damaged. Test the carbon monoxide detector every time you use the RV. Know what the symptoms of carbon monoxide poisoning are:

- Dizziness
- Vomiting
- Nausea
- Muscular twitching
- Intense headache
- Throbbing in the temples
- Weakness and sleepiness
- Inability to think coherently

If you or anyone else experiences any of these symptoms get to fresh air immediately. Shut the generator down and do not operate it until it has been inspected and repaired by a professional. If the symptoms persist seek medical attention.

NOTE Carbon Monoxide is poisonous and can cause unconsciousness and death.

1. Do not operate the generator while sleeping. You would not be aware of exhaust entering the RV, or alert to symptoms of carbon monoxide poisoning.
2. Never store anything in a generator compartment. Always keep the compartment clean and dry.
3. Do not operate the generator in an enclosed building or in a partly enclosed area such as a garage. It is also not recommended that you use the generator when there are other vehicles nearby.
4. Review the safety precautions for fuel and exhaust fumes elsewhere in this manual.
5. Do not operate the generator when the RV is parked in high grass or brush. Heat from the exhaust could cause a fire in dry conditions.
6. Never operate your chassis or generator engine, or the engine of any vehicle, longer than necessary when the vehicle is parked.
7. Do not simultaneously operate generator and a ventilator which could result in the entry of exhaust gas. When exhaust ventilators are used, we recommend that a window on the opposite side of the unit “upwind” of exhaust gases be opened to provide cross ventilation.
8. When parked, orient the vehicle so that the wind will carry the exhaust away from the vehicle. Do not open nearby windows, ventilators, or doors into the passenger compartment, particularly those which can be “down wind”, even part of the time.
9. Do not operate the generator when parked in close proximity to vegetation, snow, buildings, vehicles, or any other object that could deflect the exhaust under or into the vehicle.
10. Do not touch the generator when running, or immediately after shutting off. Heat from the generator can cause burns. Allow the generator to cool before attempting maintenance or service.

CHEMICAL SENSITIVITY

After you first purchase your new recreational vehicle and sometimes after it has been closed up for an extended period of time, you may notice a strong odor and chemical sensitivity. This is not a defect in your recreational vehicle. Like your home, there are many different products used in the construction of recreational vehicles, such as carpet, linoleum, plywood, insulation, upholstery, etc. Formaldehyde is also the by-product of combustion and numerous household products, such as some paints, coatings and cosmetics. However, recreational vehicles are much smaller then your home and therefore the exchange of air inside a recreational vehicle is significantly less than a home. These products, when new or when exposed to elevated temperatures and/or humidity, may "off-gas" different chemicals, including formaldehyde. This off gassing, in combination with the minimal air exchange, may cause you to experience irritation of the eyes, nose, throat and sometimes headache, nausea, and a variety of asthma-like symptoms. Elderly persons and young children, as well as anyone with a history of asthma, allergies, or lung problems, may be more susceptible to the effects of off-gassing.

FORMALDEHYDE

Most of the attention regarding chemical off-gassing surrounds formaldehyde. Formaldehyde is a naturally occurring substance. It is also a key industrial chemical used in the manufacture of the numerous consumer products which were referred to above and used in the construction of recreational vehicles. Trace levels of formaldehyde are also released from smoking, cooking, use of soaps and detergents such as carpet shampoos, cosmetics, and many other household products. Some people are very sensitive to formaldehyde while others may not have any reaction to the same levels of formaldehyde. Amounts released decrease over time.

VENTILATION

To reduce or lessen exposure to chemicals from off-gassing it is of utmost importance that you ventilate your recreational vehicle. Ventilation should occur frequently after purchase and at times when the temperatures and humidity are elevated. Remember off-gassing is accelerated by heat and humidity. Open windows, exhaust vents, and doors. Operate ceiling and/or other fans, roof air conditioners, and furnaces and use a fan to force stale air out and bring fresh air in. Please also follow the recommendations and tips on how to avoid condensation problems. Many of the recommendations mentioned there will assist in avoiding exposure to chemicals that off-gas.

SMOKING

We recommend that you do not smoke inside your recreational vehicle. In addition to causing damage to your recreational vehicle, tobacco releases formaldehyde and other toxic chemicals.

MEDICAL ADVICE

If you have any questions regarding the health effects of formaldehyde, please consult your doctor or local health department.

TIPS TO CONTROLLING CONDENSATION

To avoid condensation problems, try to follow these tips to help alleviate excess moisture.

- Allow excess moisture to escape to the outside when bathing, washing dishes, hair drying, laundering, and using appliances and non-vented gas burners.
- Always use the vent hood when cooking.

- Keep the bathroom door closed and the vent or window open when bathing and for a period of time after you have finished.
- Do not hang wet clothes in the vehicle to dry.
- In hot weather, start the air conditioner early as it removes excess humidity from the air while lowering the temperature.
- Keep the temperature as reasonably cool during cold weather as possible. The warmer the vehicle, the more cold exterior temperatures and warm interior temperatures will collide on wall surfaces, thus creating condensation.
- Use a fan to keep air circulating inside the vehicle so condensation and mildew cannot form in dead air spaces. Allow air to circulate inside closets and cabinets (leave doors partially open). Please keep in mind that a closed cabinet full of stored goods prevents circulation and allows the exterior temperature to cause condensation.
- The natural tendency would be to close the vehicle tightly during cold weather. This will actually compound the problem. Simply put, you need to remove some of the warm air, and allow some cool air to get inside the vehicle, so the furnace will not recycle humid interior air.
- Use fluorescent ceiling lights and minimize prolonged use of the incandescent lights, which produce heat and contribute to condensation in the roof above the ceiling lights.

WHAT ARE MOLDS?

Molds are microscopic organisms that naturally occur in virtually every environment, indoors and out. Outdoors mold growth is important in the decomposition of plants. Indoors, mold growth is unfavorable. Left unchecked, molds break down natural materials, such as wood products and fabrics. Knowing the potential ricks is important for any type of owner to protect their investment.

WHAT FACTORS CONTRIBUTE TO MOLD GROWTH?

For mold growth to occur, temperatures, indoors and outdoors, must be between 40 degrees and 100 degrees Fahrenheit and also have a source of moisture, such as humidity, standing water, damp materials, etc. Indoors, the most rapid growth occurs with warm and humid conditions.

HOW CAN MOLD GROWTH BE INHIBITED?

By controlling relative humidity, the growth of mold and mildew can be inhibited. In warm climates, use of the air conditioner will reduce the relative humidity. Vents are located in the bathing and cooking areas and constant use is advised during food preparation and bathing, even during colder weather. Additionally, opening a window during these activities will assist in ventilation. In extremely humid conditions, the use of a dehumidifier can be helpful. If using a dehumidifier, please read and follow all manufacturer instructions and recommendations to the use and cleaning of the dehumidifier.

Frequent use of your RV or regular cleaning is an important preventative measure. Further, any spills should be wiped up quickly and dried as soon as possible. Avoid leaving damp items lying about. On safe surfaces, use mold or mildew killing products. Check sealants regularly, and reseal when necessary to avoid water leaks. Proper

preventative maintenance to the RV and its accessories, as described will provide the best protection to the RV.

For more information, please see “Tips to Controlling Condensation” on page 33.

EFFECTS OF PROLONGED OCCUPANCY

Your motorhome was designed primarily for recreational use and short-term occupancy. If you expect to occupy the motorhome for an extended period, be prepared to deal with condensation and the humid conditions that may be encountered. The relatively small volume, and tight compact construction of modern recreational vehicles, mean that the normal living activities of even a few occupants will lead to rapid moisture saturation of the air contained in the motorhome, and the appearance of visible moisture, especially in cold weather.

Just as moisture collects on the outside of a glass of cold water during humid weather, moisture can condense on the inside surfaces of the motorhome during cold weather when relative humidity of the interior air is high. This condition is increased because the insulated walls of a recreational vehicle are much thinner than house walls. Estimates indicated that a family of four can vaporize up to three gallons of water daily through breathing, cooking, bathing, and washing. Unless the water vapor is carried outside by ventilation, or condensed by a dehumidifier, it will condense on the inside of the windows and walls as moisture, or in cold weather as frost or ice. It may also condense out of sight within the walls or the ceiling where it will manifest itself as warped or stained panels. Appearance of these conditions may indicate a serious condensation problem. When you recognize the signs of excessive moisture and condensation in the motorhome, action should be taken to minimize their effects. For tips on controlling condensation see “Tips to Controlling Condensation” section.

NOTE Your motorhome is not designed, nor intended, for permanent housing. Use of this product for long term or permanent occupancy may lead to premature deterioration of structure, interior finishes, fabrics, carpeting, and drapes. Damage or deterioration due to long-term occupancy may not be considered normal, and may under the terms of the warranty constitute misuse, abuse, or neglect, and may therefore void certain warranty protections.

FRESH WATER SYSTEM

Your motorhome is self contained, able to carry fresh water in the potable storage tank and hold the wastewater in dual holding tanks for dumping when convenient. Water connections are also available for a city water hose hookup to an external pressurized water source.

FILTER / WATER PUMP

The fresh water storage tank supplies potable water to all fixtures within your motorhome by means of a 12 Volt water pump. This pump is located close to the storage tank and is equipped with a check valve that ensures directional flow away from the tank. The pump has an on/off switch, which is located on the monitor panel, bathroom, or termination compartment. The pump will automatically build up pressure and maintain that pressure when turned on. The pump should be turned off when the fresh water tank is empty or when the motorhome will not be in use. Continued operation with a dry tank may damage the pump. Your pump has a filter on the inlet side. This filter should be cleaned after each tankful of water for the first few uses. To remove the cover press in firmly and twist counterclockwise about one eighth turn. Pull the screen out of the bowl and rinse clean. Reassemble in the reverse fashion. For more information check your water pump Owner's Manual located in your Owner's Information Kit.

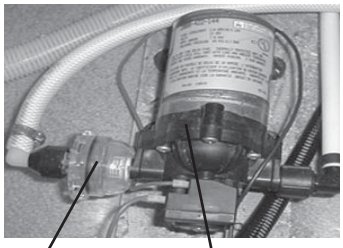

FRESH WATER FILL

The fresh water tank can be filled by an external hose through the potable water fill located outside your unit. To fill, make sure that the tank and low point drains are closed. Simply connect the external hose directly to the receptacle labeled "Potable Water" on the outside of your motorhome. Turn on the external water source and the tank will fill up. Check the monitor panel while filling the tank to determine how full the tank is. When full, water may spill back out through the inlet or vent. There is no automatic shut-off for the fresh water tank fill. When completely filling the tank to maximum water capacity, fill all water lines and the water heater as well. When possible, traveling with an empty fresh water tank will provide for more cargo carrying capacity and better gas mileage.

CITY WATER HOOK-UP

If you choose to use city water directly for your water source, simply attach the external hose to the inlet labeled "City Water" located on an exterior side of your motorhome. Now you have a pressurized water supply from the motorhome park or city water supply hookup. The same water lines are utilized as with the fresh water storage tank and pump; however, the pump's check valve bypasses both the pump and the fresh water tank. Turn on the water supply and open faucets to purge any air trapped in the water system.

NOTE Some water sources develop high water pressure, particularly in mountainous regions. These campgrounds or hookup locations may not have regulated water pressure, which could be considered excessive. High pressure is anything over 55 psi. Excessive pressure may cause leaks or damage to your water system. Water pressure regulators are available to protect the water system against high pressures. Check with your dealer for recommendations of water pressure regulators.

LOW POINT DRAINS

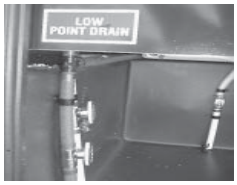

Low point drains are located either in the holding tank compartment or in a rear storage compartment on the driver's side of the coach. These drains are used when the system is to be completely cleared of water.

SANITIZING THE SYSTEM

You should sanitize and disinfect the fresh water system upon delivery of the unit and at least once per year or whenever the motorhome is unused for prolonged periods of time. This will help keep your water system fresh and discourage the growth of viral and bacterial contamination, which may be contained in your water supply. Use a chlorine and fresh water rinse as follows:

1. Drain the fresh water tank by opening the drain valve. All of the faucets should be in the closed or off position.

2. Prepare a solution of 1/4 cup household liquid chlorine bleach (5% sodium hypochlorite) to one gallon of water for every 15 gallons of tank capacity. Do not pour bleach straight into tank. Bleach must be diluted in water prior to filling.

   Example: Add four 2/3 gallons solution to a 70 gallon tank.
   Add five 1/3 gallons solution to a 80 gallon tank.
   Add six 1 gallon solution to a 90 gallon tank.
   Add six 2/3 gallons solution to a 100 gallon tank.

   This mixture puts a 50 PPM (parts per million) residual chlorine concentration in the motorhome's water tank. This will act as quick-kill dosage for some harmful bacteria, viruses, and slime-forming organisms. Concentrations higher than 50 PPM may damage water lines and/or tank.

3. Close all faucets and drains, and fill the fresh water tank with the rinse solution through the potable water fill.

4. Turn on the pump switch and circulate the rinse solution throughout the entire system.

5. Once the rinse solution has been circulated through the entire system, fill the fresh water tank until it is full.

6. Close all faucets and drains and let the system sit for approximately three (3) hours.

7. Drain the entire system.

8. Flush the complete system with fresh water until chlorine odor disappears.

9. Finally, close all drains and fill the fresh water tank as you normally would. Make sure the water heater has water in it prior to igniting.

⚠WARNING Chlorine is poisonous. Recap bottle and clean any appliances used with soap and water.

WASTE WATER SYSTEM

The waste water system is comprised of dual holding tanks with individual termination valves. The holding (solid waste) tank as indicated on your monitor panel, collects all the waste material from the toilet. The gray water tank collects all of the liquid waste material from the sinks, drains, and showers. Both tanks are joined together after the termination valve to provide a single termination outlet for convenient dumping of waste materials. A flexible sewer hose (which is not provided) is required to make the connection between your unit's termination valve and the approved dump station inlet.

The drainage system is very similar to that of your home. The system is trapped and vented to prevent waste gases from entering your motorhome. The drain piping is made of ABS material and is resistant to most chemicals. The "P" traps at the sinks, showers and tubs are available for use as clean-outs if necessary.

HEATED HOLDING TANKS

Your vehicle's holding tank compartments are heated by the furnace duct work. It will heat the tanks when the furnace is operating.

DUMPING THE HOLDING TANKS

As mentioned previously, your holding tanks terminate together at one location for convenience in dumping your tanks. A twist-on cap is located at the terminal outlet to help prevent leakage of materials.

⚠ CAUTION The holding tanks are enclosed sewer systems, and must be drained into an approved dump station. Tanks should be thoroughly drained and rinsed to prevent any accumulation on the interior of the tanks.

1. Twist off the termination cap counterclockwise. Some liquid may be trapped between the valves.
2. Connect the sewer hose by turning it clockwise, making sure that the connection end levers are locked over the termination end.
3. Deposit the other end of the sewer hose into an approved dump station inlet.
4. Open the black termination valve first and drain.
5. Open the gray (smaller) tank valve to drain and flush out the hose.
6. Rinse the tanks and hose thoroughly with fresh water before disconnecting.
7. Close the termination valves.
8. Rinse the sewer hose with the faucet provided in the termination compartment.
9. Replace the sewer hose to the storage location.
10. Replace the termination cap on the outlet, making sure that it is secured and locked.
11. You may wish to add an approved deodorant chemical, approved for your sewer system, to aid in the breakdown of solid wastes as well as making your system more pleasant to use.

NOTE Do not leave the termination valves in the open position or open them prior to having the sewer hose connected. Do not remove the termination cap with the termination valves in the open position.

HOW TO PREVENT BLOCKAGE OF DRAIN LINES

The most common holding tank problem is blocking the drain lines, which can be minimized by following a few simple suggestions:

- Prior to dumping, make sure your tank is at least 1/3 full.
- Keep the tank valves closed, and the termination cap on.
- Fill and cover the bottom of the tank with water after dumping is complete and leave the water in the tank.
- Use only approved, biodegradable, toilet tissue designed specifically for motorhome systems.
- Always use plenty of water when flushing.
- Do not put facial tissue, paper, or sanitary napkins into your holding tanks.
- Do not put solid objects into the tank which could puncture or scratch your tanks.

TERMINATION COMPARTMENT COMPONENTS

The termination compartment has many operations. Listed below are the fixture call outs and functions:

1. Exterior shower head. For washing animals, hands, sewer hose, or any exterior cleaning job.
2. Termination valve handle. To open, grab handle, and pull outward. Make sure that the drain hose is connected.
3. Termination cap. Remove this to install the sewer hose. Be sure that the termination valves are closed before removing this cap.
4. Termination valve handle. To open, grab handle, and pull outward. Make sure that the drain hose is connected.
5. Sewer holding tank flush attachment. Attach the city pressure hose and allow the water to flow for three minutes. Be sure to open the termination valves and have the sewer hose attached and draining into an approved waste disposal system.
6. Hatch cover. Open this and pass your city pressure hose through. Close with hose passing through small opening in the cover.
7. Exterior faucet. For mixing the water temperature for the exterior shower head.
8. Compartment light. This is controlled by the compartment light switch at the entry door.
9. Low point drains. Use these to drain your water tank and lines in preparation for winterization.

The basic utility systems in your unit can be classified under two general titles, Electrical, and Propane. This section outlines these systems, describing their function, operation, and simple maintenance. This section is not intended as a service guide. Should a problem arise, we recommend that you contact your Damon dealer.

The electrical system in your motorhome is designed and built in accordance with the latest codes, standards, and regulations effective at the time of construction. It consists of two types of systems, alternating current (AC) 120 Volt service and direct current (DC) 12 Volt service. Because of the many model variations and options, it is not possible to provide wiring diagrams in this manual. We recommend that any electrical work be done by a Damon dealer or a qualified RV electrician.

CHASSIS ELECTRICAL

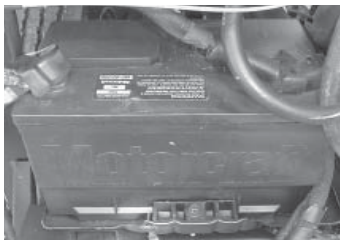

The chassis electrical system is separate from the coach electrical system, except for the emergency start which may provide power from the auxiliary batteries to the chassis battery. The chassis system gets its power from the automotive battery, providing power to all of the dash controls and their functions. If any chassis electrical system should fail, first check the fuses at the circuit panel under the interior dash on the drivers' side. These are automotive type fuses, which are available at many service stations. The dash fuses will be located either under the dash on the drivers' side, or in the Battery Control Center (BCC) in the compartment in front of the drivers' front tire.

⚠WARNING Replace fuses or bulbs only with those of equivalent size and type as marked on the fuse or bulb. Incorrect sizing will not match component circuitry causing a possible electrical hazard.

COACH ELECTRICAL

The direct current (DC) system supplies all the power to operate the 12 Volt devices in your vehicle. It is made up of four parts:

1. Auxiliary Coach Batteries
2. Chassis Batteries
3. Converter/Inverter
4. Battery Control Center (BCC)

The system has been designed to provide adequate power during travel, dry camping or campground use.

When shore power is unavailable, the coach batteries power all house 12 Volt devices. The coach batteries are of the golf cart variety and are capable of being deeply discharged. With a large reserve rating, the batteries are able to provide limited use for several days before needing to be recharged. Because of the large power rating, the batteries must be recharged for a minimum of 24 hours to reach a full charge.

⚠WARNING Never expose batteries to open flame or electrical spark. Chemical action in the battery generates hydrogen gas which is flammable and explosive. Do not allow battery electrolyte (battery acid) to contact skin, eyes, fabric, or painted surfaces. Wear eye protection when working with batteries.

CONVERTER/ INVERTER

Charging of the batteries comes from one of two sources, the engine alternator or the converter. When driving, circuitry in the BCC (Battery Control Center) directs charging current from the chassis electrical system to the coach battery bank. When power from

either the campsite or generator is present, the converter charges the batteries while also providing power for the house circuits. The converter is an electronic device with an output rating of 80 amps DC (Direct Current) for units equipped with 50 amp AC (Alternating Current) service. It is connected directly to the coach batteries through the battery disconnect in the BCC. All of the converter's output, minus the house power needs, is available to charge the batteries. Units with 50 amp AC service are equipped with a Charge Wizard to control the demand for charge directed to the batteries.

The inverter converts 12 Volt power from your house batteries to 120 Volt power for your motorhome. The inverter will power the front and rear TV, Home Theater, the VCR, the GFCI (Ground Fault Circuit Interrupter) circuit, the microwave and all 120 Volt receipts. Be aware that batteries are a limited power source and will quickly discharge under high loads.

ALTERNATING CURRENT SYSTEM

The AC electrical system provides grounded electrical power to your 120 Volt electrical appliances through the external shoreline or your power generator. The shoreline is a one-piece molded cord that provides a weatherproof cable assembly. Included in this cord is a grounding pin. If any adapter or extension cord is used, ensure the wire is sufficiently sized for the amperage of the motorhome. Be sure the grounding pin is maintained.

NOTE Electrical output devices, extension cords and adapters must be grounded and suitable for the electrical requirements of your motorhome. Failure to provide sufficient electrical power can cause low voltage and/or damage to your appliances and motorhome.

AC receptacles are located throughout your unit for your convenience. Certain circuits are dedicated to individual appliances (i.e. air conditioners, microwave/ convection oven) because of load requirements.

GFCI

Your motorhome is provided with a Ground Fault Circuit Interrupter (GFCI) receptacle located in the bathroom or galley which also provides protection to all outside receptacles. The GFCI is designed to limit the time of exposure to an electrical shock caused by current leakage to the ground.

NOTE The GFCI should be checked once a month to assure proper operation. To test the GFCI:

1. Press the TEST button.
2. The RESET button will pop up. If the RESET button does not pop up, a loss of ground fault protection is indicated. DO NOT USE that outlet or other outlets on the same circuit until a qualified RV electrician has checked out the electrical system.
3. To restore power, push the RESET button.

NOTE If the outside receptacles do not work, check the GFCI receptacle to make sure the reset button has not been tripped.

BATTERY CONTROL CENTER

The Battery Control Center (BCC) houses all the fuses for your auxiliary coach circuits. The BCC is located in front of the drivers front tire inside the compartment of the fenderskirt. To remove the BCC cover locate the tabs on each side of the box, pull away slightly and remove. Inside you will find a series of fuses for the extra circuits not available on the automotive or interior house 12 volt fuse boards. These style fuses are available at any automotive or RV store. If it should become necessary to replace any of these fuses, be sure to replace them with the same style and amperage rating. The circuit wiring is sized for that particular amperage. The BCC will sense when to charge either set of batteries. If the voltage falls below the minimum requirements, the BCC will switch the charge to that set of batteries. Terminals inside the BCC are available for testing its functionality. This testing should be performed by a qualified RV technician.

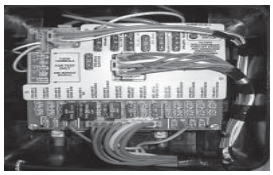

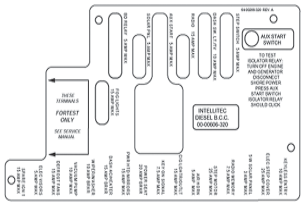

GENERATOR

If your motorhome is equipped with a generator, it will provide independent AC power. When the generator is in operation an automatic switch will change the AC appliances to generator power from the previous AC source. A short delay occurs before the switching process is complete to allow the generator to stabilize its output. The generator is mounted to allow for easy access during service functions. Refer to the Generator Owner's Manual for necessary service requirements and operating instructions.

⚠WARNING EXHAUST GASES ARE DEADLY. Do not block the tail pipe or situate the vehicle in a place where the exhaust gases have any possibility of accumulating either outside, underneath, or inside your vehicle or any other nearby vehicles. Outside air movements can carry exhaust gases inside the vehicle through windows or other openings remote from the exhaust outlet. Operate the generator only when safe dispersion of exhaust gases can be assured, and monitor outside conditions to be sure that exhaust gases continue to be dispersed safety.

⚠WARNING Do not under any circumstances operate the generator engine while sleeping.

MONITOR PANEL

The monitor panel allows you a convenient check of the approximate levels of all systems at the touch of a button. It is located in the hallway and includes:

The water pump switch

The level test button for:

- Propane tank
- Fresh water tank
- Holding tank 1 (black/toilet waste water)
- Holding tank 2 (gray/sink and shower waste water)

Push and hold the button until the panel registers a reading.

The levels are registered as:

- F (full)
- 2/3 full
- 1/3 full

NOTE The monitor panel gives its readings of the water and waste tanks by means of an electrical signal between the tank probes. If there is an extremely low mineral content in the water, or if there is buildup or coating on the sensor probes on the interior of the tank(s), the readings on the monitor panel may be incorrect.

NOTE Avoid pouring grease, oils, or similar substances down your drain or the toilet. If this should occur, the holding tanks may need to be washed out with soap and water. Inaccurate monitor panel readings could occur.

ROOF AIR CONDITIONER

Your Damon Motor Coach may be equipped with two roof mount air conditioners, one in the front and one in the rear. Both air conditioners can be operated on either generator power or by an external power source. Your motorhome may be equipped with an electric heat pump. Using this for heat will reduce your furnace propane consumption. Use the Remote to select your appliance and set the temperature. There is a timer available for setting the heat or A/C operating times. You may notice some delays while changing from heat to A/C and back. This prevents damage to the compressor. When changing the batteries in the remote, be sure to press the Reset button with a pen or pencil. See your Air Conditioner Owner's Manual in the Damon Owner's Information Kit for more details.

PROPANE SYSTEM

This vehicle is designed with a propane system to provide a safe and reliable fuel source for your range, furnace, water heater, and refrigerator. As with any flammable and volatile material, proper handling and precautions should be exercised at all times. The following warnings must be reviewed and adhered to for safe and trouble free operation.

⚠WARNING Propane containers should not be placed or stored inside the vehicle. Propane containers are equipped with safety devices that relieve excessive pressure by discharging gas into the atmosphere.

⚠WARNING It is not safe to use cooking appliances for comfort heating. Cooking appliances need fresh air for safe operation. Before operation:
- Open overhead vent or turn on exhaust fan, and
- Open window.

A warning label has been located in the cooking area to remind the user to provide an adequate supply of fresh air for combustion. Use proper ventilation when using the cooking appliances to avoid the dangers of asphyxiation.

⚠WARNING Do not fill containers to more than 80 percent of capacity. Over filling the propane container can result in uncontrolled gas flow, which can cause fire or explosion. A properly filled container will contain approximately 80 percent of its volume as liquid propane.

⚠WARNING Portable fuel burning equipment, including wood, charcoal grills, and propane stoves, should not be used inside the motorhome. The use of this equipment inside the vehicle may cause fires and/or asphyxiation.

⚠WARNING Do not bring or store propane containers, gasoline, or other flammable liquids inside the vehicle because fire or explosion may result.

⚠WARNING Propane has a distinctive odor. If you are unaware of the nature of an odor contact a Damon dealer. If you smell propane:

- Extinguish any open flames, pilot lights, and all smoking materials.
- Do not touch any electrical switches.
- Shut off the gas supply at the tank valve or gas supply connection.
- Open doors and windows.
- Leave the area until the odor clears.
- Have the gas system checked immediately by a certified RV technician.

Annual maintenance should be conducted on the propane gas appliances and equipment by an authorized dealer.

PROPANE TANK

The propane tank is mounted to the chassis below the floor between the frame rails and behind the lower compartment door of your motorhome. The tank needn't be removed, as it is accessible for filling through a remote fill under the lower compartment door in the drivers side. The tank and fittings have been completely assembled; however, upon initial filling, all connections should be checked for leakage by a certified RV technician.

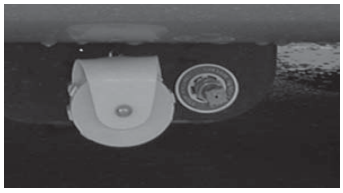

The propane is stored in the tank as a liquid under pressure and vaporizes under the control of the pressure regulator for use with all of the propane appliances. The propane in the tank is much colder than the air that surrounds the tank, but as the air temperature drops closer to the temperature of the liquid in the tank, the liquid doesn't vaporize as easily. Consequently, the BTU value of the propane drops dramatically. The closer the tank is to full during cold temperatures, the better the BTU value will be; however, do not fill the tank to more than 80 percent (80%) of capacity.

Freezing of the propane system is a potential problem during cold temperatures because of moisture in the propane or supply system. Precautions should be taken to keep your tank and system free of moisture. Check with your propane service station about approved antifreeze or deicers, which may be available to reduce the possibility of a freeze.

The tank has a gauge installed to show the level of propane in the tank. The tank level can be remotely read from the monitor panel. The monitor panel is usually located in the hallway.

PROPANE REGULATOR

The propane tank has a regulator installed adjacent to the main shut-off valve. The regulator controls the pressure to the appliances as required for proper operation. This regulator has been preset by the regulator manufacturer and should not be adjusted unless necessary, and then only by a qualified propane service technician.

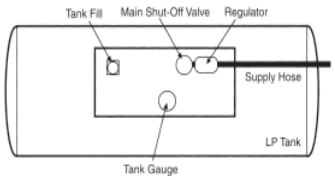

The regulator has a vent to permit it to breath, allowing the diaphragm to move up and down, and also allowing a release for excess pressure which may build up. This vent must be facing downward and should be checked periodically to make sure that it is clean and free from obstructions. Clogging from corrosion, dirt, insects and other debris is the most common cause of regulator malfunction.

⚠WARNING The propane regulator must always be installed with the diaphragm vent facing downward. Regulators that are not in compartments have been equipped with a protective cover. Make sure that the regulator vent faces downward and that the cover remains in place to minimize vent blockage that could result in excessive gas pressure, causing fire or explosion.

HOME THEATER PROGRAMMING

PIONEER VSX-D515 PROGRAMMING INSTRUCTIONS-1:

1. Turn the receiver power ON.
2. Press the RECEIVER button on the top left side of the remote.
3. Press the SYSTEM SETUP button located near the center of the remote.
4. Press the RIGHT ARROW button near the center of the remote until the display reads SP SETUP. Then press ENTER on the remote twice.
5. Press the DOWN ARROW button on the remote until the display reads F LARGE. Then press ENTER.
6. Press the DOWN ARROW button until the display reads C SMALL. Then press ENTER.
7. Press the DOWN ARROW button until the display reads S SMALL. Then press ENTER.
8. Press the DOWN ARROW button until the display reads SB NO. Then press ENTER.
9. Press the DOWN ARROW button until the display reads SW YES. Then press ENTER.
10. Press the RETURN button three times. This button is located just above and to the right of the arrow keys.
11. For more programming information please refer to the product's owners manual in your motorhome.

PIONEER VSX-D515 PROGRAMMING INSTRUCTIONS-2:

1. Press the DVD/LD button on the receiver.
2. Press the SIGNAL select button on the receiver until the display reads DIGITAL.
3. Push the STANDARD button on the receiver until the display reads DOLBY PL.
4. Press the DVR/VCR button on the receiver.
5. Press the ADVANCED SURROUND button on the receiver until the display reads 5-STEREO.
6. Press the CD-R/TAPE button on the receiver.
7. Press the ADVANCED SURROUND mode button on the receiver until the display reads 5-STEREO.
8. Press the AM or FM button on the receiver.

9. Press the ADVANCED SURROUND button on the receiver until the display reads 5-STEREO.
10. Press the CD button on the receiver.
11. Press the SIGNAL select button on the receiver until the display reads DIGITAL. Press the ADVANCED SURROUND mode button on the receiver until the display reads 5-STEREO.
12. Press the TV/SAT button on the receiver.
13. Hit the ADVANCED SURROUND button on the receiver until the display reads 5-STEREO.

NOTE On the home theater system the DVD 5.1 button is unusable.

OPERATING INSTRUCTIONS

Playing a DVD:

1. Make sure the receiver, TV and DVD/CD player are ON.
2. Press the TV/VIDEO button on the TV remote until the TV screen reads VIDEO 1.
3. Press the DVD/LD button on the receiver.
4. Press the OPEN/CLOSE button on the DVD/CD player.
5. Place DVD disc in the player.
6. Press the PLAY button on the DVD/CD player.
7. Follow instructions on screen using the DVD remote.
8. Adjust volume on the receiver as desired.

Playing a VCR Tape:

1. Make sure the VCR, TV and the receiver are turned ON.
2. Press the DVD/VCR button on the receiver.
3. Press the TV/VIDEO button on the TV remote until the TV screen reads VIDEO 1.
4. Insert the tape and press PLAY on the VCR.
5. Adjust the volume on the receiver as desired.

Watching TV:

1. Make sure the TV and the receiver are turned ON.

2. Tune the TV to the desired channel.
3. Press the CD-R/TAPE button on the receiver.
4. Adjust the volume on the receiver as desired.

Watching a Satellite Station:

1. Make sure the TV, receiver and the satellite receiver are turned ON.
2. Press the TV/VIDEO button on the TV remote until the TV screen reads VIDEO-1.
3. Select the desired channel on the satellite system.
4. Press the TV/SAT button on the receiver.
5. Adjust the volume on the receiver as desired.

Playing CD's:

1. Make sure the receiver and DVD/CD player are turned ON.
2. Press the CD button on the receiver.
3. Press the OPEN/CLOSE button on the DVD/CD player.
4. Place the CD disc and press the PLAY button on the DVD/CD player.
5. Adjust the volume on the receiver as desired.

Listening to the Radio:

1. Make sure the receiver is turned ON.
2. Use the band button on the receiver to switch between AM or FM.
3. Adjust the volume on the pioneer receiver as desired.

NOTE On the home theater system the DVD 5.1 button is unusable.

Playing the Rear TV:

1. Make sure the TV is ON and on channel 4.
2. Make sure the DVD/CD is ON.
3. Press the DVD button for the TV 2 on the amplified video distributor switch box.
4. Press the modulator button on the amplified video distribution switch box on channel.

5. Press the PLAY button on the DVD/CD player.
6. Follow instructions on screen using the DVD remote.
7. Adjust volume on TV as desired.

NOTE When playing the DVD and the dts mode is set up in the DVD, the rear TV will not play sound.

Watching from the Roof TV Antenna or Cable TV:

1. Turn the exterior TV, exterior receiver and amplified video distribution box ON.
2. Select the button for the desired component on the video distribution box.
3 Press the V.AUX button on the exterior receiver.
4 Tune the exterior TV to your desired channel.
5. Adjust the volume on the TV and/or exterior receiver as desired.

TROUBLESHOOTING TIPS

If there is no sound:

1. Be sure that the receiver is programmed according to the instructions starting on page 46.

NOTE The rear speakers in the system are producing special effects sounds to give the system a fuller sound. They will not sound the same as the front speakers, and might in some situations not play at all.

NOTE These instructions are to be used only as a guide for the set up of the various systems. Please refer to the individual component Owner's Manuals included in the Damon Owner's Information Kit.

Driving a motorhome is similar to driving a car. You have an ignition switch, gearshift controls, turn signals, and dash components. As you sit in the driver's seat the center of the cluster includes tachometer, speedometer, fuel gauge, oil gauge, temperature gauge, and amp meter. Switches may have symbols to describe their function. See pages 51 and 52 for more detailed information on the function of each switch. Switch locations may be different from model to model.

The dash radio can be played without turning the ignition key "on" provided that the battery disconnect is in the "use" position. For units with the home theater, the dash radio can only be played if the ignition is in the "accessory" or "run" position. The cruise controls are on the turn signal lever. You can set, resume, and disengage the cruise control from this location.

The gear selector is located on the right side of the steering wheel. Some models have an overdrive switch on the end. Press the button to engage/disengage to overdrive function. Pull the lever toward you to place into the desired gear. Be sure the service brake is applied when making this selection. See the Chassis Owner's Manual for more information.

Below are descriptions of the various controls on your dashboard. Please keep in mind that these controls may be located in different positions depending on the model of your particular vehicle.

SUNSHADE/NIGHTSHADE: These switches control the sunshades. Each shade works separately, with each assigned switch. Lower the sunshade/nightshade to desired level.

HEATED MIRRORS: Use this switch to defrost your mirrors.

ICC: Courtesy Flasher (DOT-Lights): Flash after a semi-truck passes you or as a thank-you flasher when you are passing.

WIPERS: This switch is for HIGH, LOW or intermittent operation.

WASHER: This switch located on to the wiper switch provides washer fluid to the windshield. Check the washer fluid level prior to trips. Some washer fluid can freeze, so be aware of the temperature conditions where you will be traveling in order to add the proper type of fluid to your washer reservoir.

REMOTE MIRRORS: This switch allows you to set the viewing angle of your mirrors from the convenience of the driver's seat. To adjust the driver's side mirror, move the lever to the left. For the passenger's side, move the lever to the right and adjust as needed.

AUTOMOTIVE DASH

GEAR SELCTOR

DASH CONTROLS

FOG LIGHTS/DRIVING LIGHTS: Are offered to provide more visibility. Fog lights will function with low beams, Driving lights will function with high beams.

SIDE DOCK LIGHT: This switch enables the side lights to turn on when the vehicle is in reverse.

NIGHT LIGHTS: Provide lighting in the aisle of the motorhome.

HEADLIGHTS: Operates like the one in your automobile. Turning the knob to the first position turns on the parking lights. Turning the knob to the second position turns on the headlights. Pulling up on the knob turns on the fog lights. Rotating the knob controls the brightness of the dash lights. (Set this according to your preference.)

SERVICE-LIGHTS: Provide under the hood lighting.

AUXILIARY START SYSTEM: Permits using the auxiliary battery power to aid in starting the motorhome engine if the vehicle battery has become discharged. When the ignition key is turned to the start position and one or more clicking sounds are heard, it may be necessary to use the auxiliary start system as follows:

NOTE Always set the parking brake prior to using the auxiliary start system.

1. Press and hold the AUX START switch located on the dash.
2. Turn the key and start the engine in the normal manner.
3. Release the AUX START switch and operate motorhome in a normal manner.

NOTE Do not hold the ignition key in the start position for more than 30 seconds. Be careful not to run down the auxiliary RV battery as this could leave you without any 12 Volt power.

DASH FANS: Provide air flow in the cockpit area. They can be of assistance to the defroster system during cold temperatures, or circulate cool air from your air conditioner during hot weather. This is a two speed switch for low and high speed operation.

GENERATOR START: A switch on the dash, in the bedroom or on the generator allows remote starting or shutdown of your power generator. When the generator is running, a light on the dash switch will be illuminated. An hour meter shows the total amount of time the generator has been in operation.

STEERING WHEEL

The steering wheel, “Smart Wheel” has switches for the cruise control, horn and the wipers. Use these as you would the ones in your car. The symbol above the cruise buttons controls the ICC lights. Flash after a semi-truck passes you or as a thank-you flasher when you are passing. The symbol above the wiper/washer buttons controls the headlight high beams. Use this as a flash to pass signal before passing.

⚠WARNING Never attempt to adjust the steering wheel while the vehicle is in motion. Loss of vehicle control could result.

RADIO & COMPONENTS

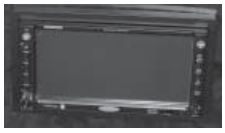

The radio system has many features. Some of those features include, AM/FM radio, cd, dvd, satellite radio ready, and MP3 compatible. Your system may also include back-up camera capabilities. This feature allows you to see what is behind your vehicle as you back up or park. The camera is located on the rear cap of the coach. Please refer to the products owner’s manual for complete operating instructions.

TEMERATURE CONTROL

The climate controls in your motorhome are similar to the controls in many cars. You can adjust the fan speed, cool/warm air mixture, and climate settings, with the turn of a knob. Your climate control console includes settings for maximum A/C, normal A/C, vent, floor heat, a mixture of floor and dash heat, and defrost. Setting controls to maximum A/C circulates and cools interior air. Setting controls to normal A/C conditions outdoor air. This chassis climate control is not intended to heat or cool the entire motorhome.

PARKING BRAKE

The parking brake is engaged when the shift selector is placed into the N position and the yellow parking brake knob is pulled. To release, press in on the yellow parking brake knob.

NOTE Be sure the service brakes are engaged whenever applying or releasing the parking brakes.

LEVELING SYSTEM

The leveling jack control pad is located on the drivers left side panel. The parking brake must be applied and the ignition system must be on before engaging the leveling jacks. Be sure that the motor coach is on level ground before beginning to level the coach. Using the control pad, push the ON/OFF switch pad. The system is now operational and the electronic level lights will become active. Push the AUTO switch pad to begin the automatic leveling cycle. To retract the jacks in automatic mode, press the RETRACT ALL JACKS button. The jacks will then start to retract and return to the full retract position.

NOTE In automatic mode, the RETRACT ALL JACKS button needs only to be pressed once and released for the jacks to fully retract.

If further adjustment is necessary, simply push and hold the MAN switch pad for approximately five seconds until the light under this button is illuminated. Push the appropriate leg pad to override the system and level the motorhome to your satisfaction.

NOTE When leveling your motorcoach, the coach should be leveled FRONT to REAR, then LEFT to RIGHT.

To retract the jacks the motorhome ignition should be on. Push the ON/OFF switch pad on the control panel. Push and release the RETRACT ALL JACKS switch pad. All jacks

will start to retract and return to their full upright position.

NOTE In manual mode, the RETRACT ALL JACKS button will only retract the jacks as long as the RETRACT ALL JACKS button is depressed.

When this is complete, the JACKS DOWN light will go out. Read your leveling jack Owner's Manual in the Damon Owner's Information Kit for more details.

- Be sure to park the coach on solid, level ground.
- Clear all jack landing locations of debris and obstructions. Locations should be also free of depressions.
- When parking the coach on extremely soft surfaces, utilize load distribution pads under each jack.
- People and pets should be clear of the coach while operating leveling system.
- Be sure to keep hands and other body parts clear of fluid leaks.

⚠WARNING Never lift all the wheels off the ground to level the coach.

DOORS & DRAWERS

Interior doors and drawers have travel latches to keep them closed while you are in transit. To open drawers lift slightly to clear the catch, then pull open.

When storing articles:

- Always keep tools and equipment stored in areas where they will not shift while traveling.
- Whenever possible, place heavy articles in storage compartments which are low and near the axles for better weight distribution. Pack articles carefully in the storage compartments to minimize shifting. If necessary, use straps to prevent movement.
- Be sure liquid containers are capped and cannot tip or spill. Secure all glass containers and dishes before traveling.

UNDER BED STORAGE

Additional storage is accessible directly beneath the bed. Simply unlatch and lift the foot of the bed. The device is equipped with gas struts to assist with opening, holding, and closing the bed storage lid.

EXTENDING SLIDE ROOM

1. Before operating the system, verify your coach batteries are fully charged.
2. Before extending slide room, verify the following:

- Turn chassis ignition off. This system will not function with your key on. Level your motorhome by utilizing the hydraulic leveling jacks.
- Before extending the slide room, remove the travel locks from the slide room by rotating and removing, and move the driver's seat to the furthest forward position, and place the seat back in the vertical position.
- Verify that there are no objects (trees, electrical box, people, etc.) in the way of the slide room before extending it.

3. After the above steps have been verified, locate the switch for the slide room in the hallway, or bedroom of the motorhome. Turn the key to the ON position. As you press the switch to the OUT position, the room will begin to travel outward. (As a safety feature, if you let up on the switch, the room will stop moving).
4. As this slide room is designed to roll across the carpet, it may be necessary to vacuum the floor after each extension of the room.
5. It may be necessary to re-level your motorhome after the room is extended.

RETRACTING SLIDE ROOM

1. Before operating the system, verify that your coach batteries are fully charged.
2. Before retracting the room, verify the following:

- The driver's seat in a motorhome is in the most forward position, and the seat back is in the vertical position.
- No debris is caught between the slide room roof and awning. Verify that any cargo inside the motorhome during the retraction mode will not restrict the slide room.

3. Turn the key to the ON position. Press the slide room switch to the IN position. (As a safety feature, if you let up on the switch, the room will stop moving).
4. Turn the key to the OFF position. Insert the travel lock into the wall socket, two if provided. (The tension on the travel lock may be tightened by rotating the center portion of the travel lock clockwise, counter clockwise to loosen).
5. Retract leveling jacks before moving the motorhome.
6. Return driver seat to the driver's preferred position.

Your slideout requires very little maintenance. To ensure the long life of the system, read and follow these few simple procedures:

- When the room is out, visually inspect the inner slide tube assemblies. Check for

excess build up of dirt or other foreign material; remove any debris that may be present.

- If the system squeaks or makes any noises, it is permissible to apply a think coat of lightweight oil to the drive shaft and roller areas. Remove any excess oil so that dirt and debris cannot build up.

HIDE-A-BED SOFA

The hide-a-bed sofa is very similar to the one that you would find in a home. To open into a bed, and pull off all cushions, pull the handle located on the top of the mattress up and out. The bed will pull out to reach a full bed size, so check to make sure that there is adequate room before opening the bed. Use the bed as you would a normal bed. To replace the bed back to the sofa position, reverse the procedure and push the bed both in and away from the front of the sofa.

SOFA BED

Some Damon models may have a sofa bed. To convert the sofa into a bed, pull bench out and up. To convert back into a sofa, reverse procedure.

BEDROOM DOOR & LATCH

Some Damon bedroom doors slide conveniently out of the way beside the wall. Damon provides a vinyl travel strap or a slide latch to secure the door while the motorhome is in motion. The door latch is a bayonet type, which is engaged by turning the handle. Some models have an accordion type door which latches to the wall when the door is closed.

DAY/NIGHT SHADE

Your motorhome may have day/night shades, which are designed to serve a dual purpose. For daytime use, pull down the bottom half of the light colored shade which allows light to enter the motorhome while affording some privacy. For night use, or to shut light out and increase your privacy, pull the top, darker part of the shade down.

A/C & FURNACE THERMOSTAT

For your comfort we have 13,500 BTU Carrier air conditioners some with heat pumps. There is a remote control for the air conditioners for your convenience. This remote also controls the furnace. Simply point to the A/C, press heat on the remote and set your degree of comfort level.

WATER HEATER SWITCH

The hot water heater start switch is located on the wall in the galley, bathroom, or monitor panel area. The light illuminates when the switch is turned on. The light goes off when the burner is on and the water is heating. If the light comes back on, the burner is not yet lit. It may take several tries to light the water heater burner. When the element is turned on the red light will glow. Be sure the tank is full of water before using.

KITCHEN CABINETS

For your convenience, there is plenty of storage above and around the range area

for canned goods, kitchen utensils, etc. Please ensure that the doors are closed and latched before traveling to prevent the contents from falling out.

KITCHEN DRAWERS

Drawers are designed to ensure that they do not open inadvertently during travel. To open the drawers, pull out until catch releases. Until you get used to the operation of the drawers, you may think that they are stuck.

KITCHEN PANTRY

Some Damon models have a wire framed pull out pantry. To extend this pantry, remove the travel lock pin at the bottom track and pull the pantry rack outward. To prepare for travel, push the pantry rack in and reinsert the travel lock pin.

RANGE

The range cover provides extra counter space and covers the burners when not in use. When opened, it acts as a grease and splash guard. To raise the range cover, lift and push back until it snaps into place. To return the cover to its counter flush position, lift straight up to disengage the holding mechanism, and return it to the original position. The range has a piezo lighter. To operate, turn the burner valve on, then turn the piezo lighter. At that point, the pilot light will remain on for the oven until it is manually turned off. The oven is not self cleaning, and will need routine cleansing. Please do not store anything in your oven, and do not cook while the vehicle is in motion. For further instructions, please refer to the Range Instruction Manual in your Owner's Information Kit.

REFRIGERATOR

The refrigerator in your motorhome runs on either propane gas or electric power. The controls are at the top of the unit. If you use the auto mode on your refrigerator, the refrigerator will operate on 120 Volt power when available, and automatically switch to propane when shoreline is removed. You can control how cold you want your refrigerator to be with the thermostat control. Your refrigerator is equipped for large capacities with plenty of storage shelves and a crisper. The refrigerator requires normal cleaning and care. Please refer to the Refrigerator Owner's Manual in your Owner's Information Kit for more information.

MICROWAVE

The microwave operates on 120 Volt power provided by the generator or shoreline. It will de-program when the power is discontinued and must be reprogrammed when power is restored. For usage instructions, please refer to the Microwave Owner's Manual in your Owner's Information Kit.

KITCHEN SINK

The kitchen sink is much like the one in your home. It comes equipped with a sink cover board which, when in place, increases counter space. Only waste water should be disposed of down the drain. Never put grease, food, or other obstructions down the drain because you may plug the holding tank.

KITCHEN FAUCET

The faucet in your motor coach is a single lever faucet with sprayer. To use the sprayer, pull out on the head of the faucet. Press the button on top to release the water. To reinsert the hose, gently guide it back to the original position. If you are not hooked up to a pressurized water system at the city water fill, you must turn the water pump switch on. You can find the water pump switch on a bathroom wall or on the monitor panel in the hall. The water pump is a demand pump, so it will only operate when a faucet is opened to release the pressure.

DINETTE CONVERSION

To convert the dinette table into a bed:

- Release the locking mechanism located at the front of the tabletop by turning clockwise. The lever is pointing to the right in the locked position.
- Remove the back cushions from the dinette and place aside. Lift up on the bench seats.
- Press down on the tabletop until flush with the booth seats.
- Replace dinette cushions on top of the table as fits best.

Under seat storage may be reached by lifting up the bench seats.

BATH VENT

There is a power roof vent in the bathroom ceiling for use during shower and hot water use. By opening the vent and turning the fan on, hot moist air will escape, reducing condensation in the motorhome. It is extremely important that you use the fans and vent every time you use the shower or tub to eliminate excess condensation.

SHOWER HEAD & HOSE

The shower hose has a bracket that keeps the shower head from dropping and contaminating the fresh water system. It also has a vacuum breaker to prevent the head from siphoning water back into the fresh water system. The shower operates just like the shower at your home with two knobs that control the mix and flow of water, and a center valve to divert water into the shower head. A stopper is provided so that you can fill the tub.

TOILET

The toilet in your motorhome is a marine type toilet. It can be flushed by depressing the foot pedal at the front of the toilet. Make sure that you use only biodegradable toilet paper. Also use plenty of water to flush to prevent backups or blockages in the system. Your toilet model has an attached hand sprayer. Use this to rinse out the bowl, as there is not a continuous flow of water, such as in your home.

When locking and unlocking the main door, there is a dead bolt and a latch bolt which are keyed separately. Unlock both, pull the latch open, and pull out on the door handle. The main entry door is a two piece door. You can use the screen door separately from the main door by unlatching it. Slide the screen handle cover closed to keep insects out of your motorhome. If the door needs adjustment, see a Damon dealer for service.

MAIN ENTRANCE

Adjacent to each entry door is an entry assist handle for convenience and safety in entering and exiting your unit.

ASSIST HANDLE

The electric step is automatic. When the ignition switch is activated, the step will automatically retract. When the door is opened, the step will extend automatically even if the engine is running. If the switch for the step is in the OFF position, the step will fail to operate automatically. If the step malfunctions, check the battery voltage, fuses, switch alignment, and verify that the step switch is in the ON position.

ELECTRIC STEP

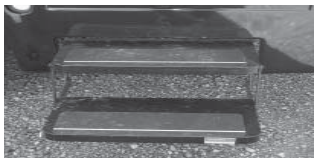

The lower compartment doors have a pocket latch. To open, simply insert your fingers under the flap and pull up. The door will continue to rise on the gas assisted struts until fully open. Push down to close the compartment, and the latch will close automatically. The doors under the slide-out and doors that are mounted below gas fired appliances with exhaust may have a prop rod so the exhaust does not damage the door. Most models have pass-through compartments for storing longer items. Always keep the doors locked when traveling to prevent accidental opening or theft.

COMPARTMENT DOORS

Damon motor coaches have plywood reinforced roofs which are strong enough to walk on. Use the two piece ladder to climb up on the roof for inspecting the roofing seal and components. Remember to store and secure the lower section before traveling. Take the ladder into consideration when backing up or parking your motorhome.

REAR LADDER

Your motorhome is equipped with a side or door awning. These awnings may be electric with an operating switch on the key fob. The operating switch is in the passengers area. To extend a manual awning you first have to loosen the round knob and lever at the bottom of the side rails. Using the provided awning rod, unlatch the lever at the top right side of the awning. Using the same awning rod, pull on the loop in the center of the awning. To retract, have the rod in the loop and release the lever at the top right side. Be careful, the awning is under spring pressure and will start to retract immediately. The awning is a convenient way to extend your campsite to include a patio within your location. When using the awning, always set one side lower than the other to allow for water runoff. For complete instructions on the use of your awning, please refer to the instructional guide in your Owner's Information Kit. When used properly, your awning provides a comfortable atmosphere during your camping excursions.

AWNING

CABLE HOOKUP/ PHONE JACKS

Many RV parks have cable television and telephone jack connections available. This will enable you to watch cable television in either the bedroom or the living area by utilizing the video selector box in the dash overhead. It will also allow you to access a telephone jack hookup. Simply plug in the TV cable or telephone cord into the outside cable and telephone receptacle.

120- VOLT OUTLET

Plug in 120 Volt AC devices here. The kitchen, bathroom, and outside receptacles are protected by a ground fault current interrupter. If the appliance does not operate, check the circuit breaker located in the 120 Volt breaker box. (See page 41)

POWER CORD

The 120 Volt power cord is stored in one of the rear compartments on the driver's side of the motorhome. Connect the coach end (large yellow) of the cord into the receptacle on the side wall of the motorhome. Turn the locking collar to hold into place. Plug the shore end (black end) into a suitable 50 amp power receptacle to provide external power to the motorhome and converter/charging system.

GENERATOR COMPARTMENT

The generator compartment is located in a storage compartment on the side of the motorhome. You can start/stop the generator from outside the unit by pushing the start button in and holding it until you hear the generator start/stop. Refer to the Generator Owner's Manual for operating and maintenance information.

FURNACE DOOR

Damon furnaces have electronic ignition, and there is no need to access this panel except for service. As with all appliances, service is best left for your dealer. To remove the panel to check for insect nests, you will need a Square or a Phillips head screwdriver. For further information, reference the furnace manufacturer's manual provided with your vehicle.

WATER HEATER DOOR

You can gain access to the water heater control panel to check for insect nests by turning the tab at the top and allowing the door to hinge down. Due to the electronic ignition, it is no longer necessary to access this compartment for lighting the pilot. It has an electronic module board, electronic ignition lighter, and a safety pop-off valve to relieve the pressure, should it be necessary.

REFRIGERATOR DOOR

The refrigerator is an electronic ignition appliance and there is no need to access this panel except for service or checking for insect nests. If a problem is encountered, follow the guidelines for use as outlined in the Refrigerator Owner's Manual located in the Owner's Information Kit. If the problem is not resolved, contact an authorized Damon dealer.

FUSE BLOCK

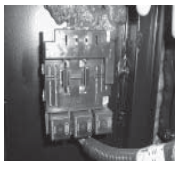

The fuse block is located in the battery control center compartment in front of the drivers front tire. These fuses control the automotive ignition and dash systems. To check the fuse, pull straight out and remove from the fuse block. The fuse can then be checked either visually or with an electrical tester.

TV HOOK-UP AREA

Your motorhome may have an exterior TV hook-up located in a storage compartment. There is a coax cable located in this area to hook your satellite or TV antenna up to. There is also an electrical outlet. You may use this as an exterior entertainment center.

SATELLITE

Your motorhome may come with an automatic satellite. The controller for the satellite is located in the video cabinet above the TV. Please see the products' owner's manual located in your owner's manual packet for complete instructions for use and maintenance.

GENERAL INFORMATION

Periodic maintenance and cleaning of your recreational vehicle is necessary to retain the dependability, safety, and appearance that will provide you with many miles of trouble free operation, as well as protecting your investment.

Make sure you read and follow all the maintenance tips and schedules that appear not only in this manual, which for your convenience we have provided for you; (reference pages 81-88), but also in the manuals provided by the chassis manufacturer and various component manufacturers. Keep good records of maintenance functions performed, and make sure you perform all owner obligations as may be required to keep your warranty in force.

It is also important to note that operating conditions will affect service timetables. Driving in extreme conditions such as heavy dust, continuous short trips, or start and stop heavy traffic means that service durations will be shortened. Discuss service timetables with both your dealer and chassis service representative. Preventative maintenance will pay for itself many times over by catching or preventing problems before they occur. Many repair costs are greatly increased due to the fact that a small problem can begin to affect other parts and systems of the motorhome if left unattended.

If a situation arises involving maintenance or cleaning activity for which you are not sure of the proper procedure, do not hesitate to contact your dealer, or chassis service representative for information.

BATTERIES

The chassis batteries are 12 Volt automotive batteries, which provide power for all vehicle requirements. Have these batteries serviced when servicing other vehicle systems.

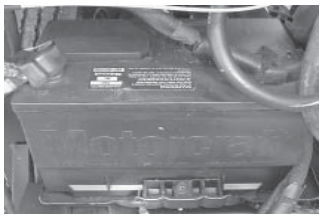

Chassis Battery

Auxiliary batteries (house batteries) for motorhomes are dual auxiliary 6 Volt batteries to provide living area power requirements. Have these batteries serviced when servicing other vehicle systems.

When operating properly, the motorhome alternator will be able to handle normal vehicle driving requirements and also recharge the batteries in a reasonable time when on the road.

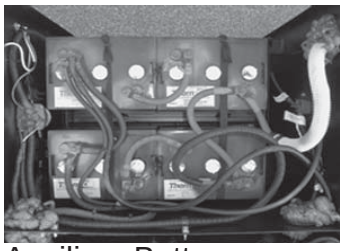

Auxiliary Battery

- Every 30 days check battery mounting. Tighten battery cables and clean terminals if necessary.
- Check and recharge as necessary. Keep connections clean and covered with a light coat of grease.
- Check the water level weekly and add distilled water if necessary.

NOTE Vehicles left in storage for extended periods of time require further provisions to maintain a proper state of charge of the vehicle batteries. Parasitic loads (drains) from the radio, clock, powertrain control module, courtesy lights or other accessories will discharge a battery if the vehicle is not used for an extended period of time. A discharged battery can actually freeze in temperatures of 32 degrees F (32°F), resulting in permanent damage to the battery. Batteries may also be permanently damaged if allowed to stand for long periods of time in a state of discharge.

To alleviate battery discharge, during periods of storage of two weeks or less, disconnect the battery by pressing the battery disconnect switch located by the entry steps to the store mode. For extended periods of time the battery should be disconnected by removing the negative cable from the battery.

A disconnected battery may also self-discharge, especially in high ambient temperatures, therefore every disconnected battery should be checked periodically and recharged if necessary.

WASTE WATER SYSTEM

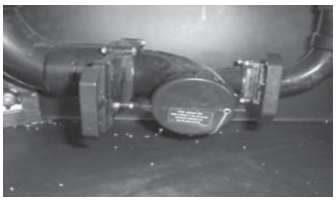

The drainage system, including the tanks and associated drain piping should be periodically inspected for loose fittings from vibrations. Any deterioration of the sealant around joints and fittings should be repaired immediately.

Check the operation of the termination valves. If they pull or close with effort, lubricate the shaft and slide valve with spray silicone. Termination valves that leak should be repaired or replaced as soon as possible.

Sometimes, a buildup of paper or other material in the inside groove of the termination valve can obstruct the valve and cause it to seat improperly. If you suspect that this is occurring, the valve can be removed from the drainage line by removing the four screws that hold it in place and sliding it out. The valve groove may then be cleaned out with a screwdriver or similar tool. Replace the valve in the line and reinstall the screws to secure it in place.

FRESH WATER SYSTEM

It is recommended that fresh water not be left in the storage tank for long periods of time. The water should be drained when the unit is being stored or not in use. Drains are located in a variety of compartments. To drain the tank and lines, simply open the low point drains and allow water to run out. After water has drained, close the valves to prevent pests from entering the system. See also “Sanitizing the System” in Chapter 6 - “Plumbing Systems” (page 37) for more information. Check all hoses, fittings, and connections regularly for leaks and signs of wear. Make sure to keep the system sanitized, and take care to winterize during cold weather.

ELECTRICAL SYSTEM

The electrical system requires minimal maintenance under normal circumstances. Most electrical maintenance in the recreational vehicle involves the chassis and auxiliary batteries. Keeping the batteries properly maintained will help to eliminate many frustrating electrical problems. For example, 12 Volt power is needed for the furnace, refrigerator, water heater, and some air conditioner functions.

GENERATOR POWER SYSTEM

The generator is another area in which simple preventive maintenance can head off problems before they happen. Read the manual supplied with the generator in the Owner’s Information Kit for the care and maintenance required on a regular basis.

If you experience electrical problems with your recreational vehicle, make sure to have it checked by an authorized Damon dealer or a qualified RV technician.

Generator power plant service, recommended by the generator manufacturer, should be performed at an authorized service center. Routine or emergency service, such as adding oil, changing filters, or replacing spark plugs, could be accomplished at an auto service center, but must be done in accordance with the service instructions specified by the generator manufacturer. Refer to the Generator Owner’s Manual for further information.

PROPANE SYSTEM

The propane system should be checked regularly for leaks and road damage. Follow the lines, looking for kinks or flattened spots that may have occurred during travel or maintenance on the recreational vehicle. A qualified propane service technician using proper equipment should check the entire system annually or whenever you suspect a problem.

The line pressure for propane appliances should be checked at least every six months. Most propane suppliers have this equipment to do the test for you.

⚠ CAUTION All service procedures should be performed only by a certified propane service technician.

Insects can build nests in the burners of the various appliances and equipment. The burner and burner orifice of the propane appliances should be cleaned out by an authorized dealer or repair facility anytime circumstances or conditions warrant, but no less frequently than on an annual basis.

ABS PLASTIC PARTS

Some components of the recreational vehicle are constructed of strong, lightweight ABS plastic. Sometimes, it may be necessary to remove stains, or generally clean. A mild solution of soap and water will clean many stains, and should be used initially. Tougher stains may require stronger cleaners, but be sure to read the label to determine if the product is recommended for use on plastics. Avoid abrasive cleansers (even the liquid and cream types), alcohol based products, and solvents such as acetone and MEK. Gasoline and kerosene should not be used because of the damaging effect they have on the plastic surface, as well as the fire hazard they present. Often the damage caused by solvents, alcohol, and oil based products may not be immediately noticeable, but the plastic is made weaker, and thus more prone to stress cracking.

ALIGNMENT

The front suspension and steering system of this vehicle was factory aligned using highly accurate equipment prior to delivery to the dealership. However, we recommend that alignment be checked and if necessary, adjusted after you have fully loaded the motorhome according to your personal needs. Thereafter, the alignment should be inspected annually to help prevent uneven tire wear. All alignments and incurred costs are the responsibility of the retail owner.

AWNING

Check that the top and bottom bracket screws are tight at the start of each camping season.

1. Lubricate the rafter arms and support arms using paraffin wax or silicone spray. Also lubricate the threads on the knobs.

2. Periodically clean the awning fabric as follows: For a vinyl material use a mixture of 1/4 cup of dish soap and 1/4 cup of bleach mixed with 5 gallons of warm water. Liberally apply this mixture on the top of the fabric, then roll the awning up for 5 minutes. This will apply the mixture to the bottom as well. Roll the awning back out and hose off with fresh water. Repeat if necessary. Allow to dry before rolling back up. Avoid the use of caustic household cleaners, mildew removers or hard bristle brushes. Do not scrub!

For an acrylic material, periodically hose off the fabric with water then let dry completely before rolling it back up. The acrylic material is water repellent, not water proof. The fabric is pretreated with a water retardant finish. Mildew cannot form on the fabric, but rather will form on dirt or dust on the fabric. The key is to keep the fabric clean. Do not scrub!

Whenever the awning is wet while rolled up, as soon as conditions allow, roll it out, hose it off and let it dry completely before rolling it back up again.

If you get water streaking or seeping behind the awning rail, inspect the rail for loose screws or peeled sealant. Always make sure the awning is extended high enough before opening the entry door.

Lower one end of the awning for proper water run off and to avoid water pooling and possible damage to the awning.

Refer to your awning users guide for complete instructions on the care and maintenance of your awning.

⚠CAUTION Failure to lower one side of the awning could result in damage to the awning fabric and/or hardware due to the weight of water pooling.

CHASSIS

Refer to your Chassis Operator's Manual for information on chassis service recommendations.

Have the engine coolant and engine oil level checked each time when refueling.

NOTE Proper engine servicing and record of servicing may be mandatory to ensure chassis warranty protection. Follow the manufacturer's instructions on periodic maintenance checks.

DOORS & DOOR LOCKS

Moving parts of the entrance door and lock should be adjusted and lubricated at least once a year or as needed depending on use. Screws and fasteners should be checked and tightened periodically. Check weather-stripping seals to assure proper fit and seal. Refer to the Owner's Manual from the door manufacturer for more in-depth instructions for care and maintenance of the entrance door.

EXTERIOR LIGHTS

Make sure to check the operation of all exterior lights often. Check headlights, clearance, turn signal, brake, and backup lights to make sure they are working correctly. Remember to check any towed vehicle or trailer lights also. Replace burned out bulbs as soon as possible.

FIBERGLASS

The care of fiberglass siding is essentially the same as any automotive finish. Take care to avoid spraying water directly into any vents when washing the motorhome.

It is important to note that any finish will deteriorate with time. Dulling, fading and yellowing will be increased by exposure to extreme sunlight, air pollutants, and excessive moisture. Motorhomes located in warmer weather climates are more prone to this type of premature fading. Surface weathering of fiberglass does not change the strength of the fiberglass. Regular washing and waxing of exterior surfaces is the best insurance against surface deterioration. If deterioration has occurred, check with your dealer for the steps required to restore the finish. Buffing or even painting may be necessary in

extreme cases. Small cracks known as gel coat crazing are a common characteristic of the gel coat finish (not warrantable defects).

WAX

Wax fiberglass surfaces at least once a year with a standard liquid or nonabrasive paste wax. Make sure to follow the directions for use as outlined by the product manufacturer. Make sure to wash and wax your unit out of the hot sun when the exterior surfaces are cool.

Clean and wax all trim extrusions when waxing the recreational vehicle sidewalls, to help avoid surface pitting. Special aluminum cleaners are available to restore the original luster to aluminum surfaces. Make sure to follow the instructions for use as outlined on the product package.

Storage of the recreational vehicle out of direct sun is also a primary way to help preserve fiberglass finishes.

Physical damage to fiberglass should be taken care of immediately to avoid moisture from entering through breaks or cracks, causing problems with interior walls and components. Cover breaks in the fiberglass with plastic, sealing the edges with tape until the proper repairs can be made.

DO:

- Wash your RV with liquid detergents.
- Wax the sidewalls using nonabrasive automotive waxes or cleaner/polishes developed for use on fiberglass boats, showers, and tubs. Follow the directions on the package.

DON'T:

- Use abrasive cleaners.
- Use rubbing compounds.
- Dry wipe surface; clean only with water and liquid detergent.

GRAPHICS

Proper care and maintenance of vinyl graphics or paint is critical in maintaining its appearance. The following cleaning and maintenance recommendations should be followed to ensure the maximum appearance and performance of your vehicle's custom designed finish:

SIDEWALLS

When washing, flush the surface with water to loosen large particles of dirt and grime.

Fill a bucket with warm water (not to exceed 120 degrees F. (120°F)) and use a mild detergent or a liquid car wash mixture. Follow manufacturer instructions on the container.

Using a clean soft cloth or sponge and the liquid car wash mixture, wipe the entire surface, using horizontal motions until it is clean. Rinse off the detergent with clean water starting from the top and rinse downward until it is clean.

Dry your vehicle with a clean soft cloth or let the vehicle air dry.

When waxing, ALWAYS use an automotive grade nonabrasive wax and cleaner. Use EXTREME care when waxing your vehicle and ALWAYS rub in horizontal motions.

DO NOT use a pressure washer.

It is strongly recommended that you DO NOT use a rotating brush car wash as it can lift the ends of your vinyl graphic or scratch your paint finish.

DO NOT use alcohol, strong solvents, bug remover, or tar remover on your painted or vinyl surface as it may leave a foggy appearance in that area.

Minimize any fuel contact with your paint finish or vinyl graphics. Prolonged contact can damage the finish.

Power buffers ARE NOT recommended.

⚠ CAUTION Do not use petroleum solvents, harsh abrasives, or citric based cleaners.

ROOF

Inspect the roof components at least twice a year to make sure that all the seals are not cracked or worn. Proper maintenance of seals is necessary to keep moisture from entering and causing severe damage such as rot, mold, or mildew. If you encounter drying, cracked, or weathered seals, make sure to reseal as necessary. Remove the old worn seals first before reapplying the new seals. Check with your dealer for the type of caulking required for thermoplastic polyolefins (TPO) roofs and the correct methods of resealing. Silicones and synthetic sealers cannot be used on the rubber roofs. Special sealers are also required for the skylights. Your Damon dealer may perform the periodic roof seals for you if desired.

It is especially important to check the seals before and after periods of extended storage or non-use. Fall and spring inspections are recommended. Check the membrane for possible damage and check all accessories and fasteners. The roof may be cut or punctured by sharp objects so care must be taken when parking and driving. If damage does occur, the roof may be patched. Check with your dealer for additional information. Parking in areas where fruits, nuts or tree sap may stay on the roof for extended periods of time may result in irremovable stains.

For Normal Cleaning:

- Use a mild laundry detergent.
- Rinse the complete roof with clean water to remove any loose dirt or debris.
- Use a medium nylon bristle brush along with your selected cleanser mixed with water and scrub the entire roof. Rinse thoroughly with clean water to avoid residue buildup on the roof or sidewall of the unit.
- For more difficult stains contact your Damon dealer for the correct heavy duty cleansers. Do not use general-purpose cleaners containing petroleum solvents,

harsh abrasives, or citric based cleaners.

If your roof should somehow be punctured, cover the puncture to seal out moisture, and have it repaired as soon as possible (check with your dealer).

The membranes used on the roof may have an extended warranty that is covered by the membrane manufacturer. This is for manufacturing defects only and does not include leaks or punctures due to improper sealing, normal wear and tear, or owner damage. See membrane manufacturer's warranty for details.

ROOF VENTS

Check roof vents regularly for debris that may block air flow or jam the cranking mechanism. Lubricate the cranking mechanism with light oil.

SEALS & ADHESIVES

It is important to maintain the seals and adhesives of your recreational vehicle to prevent moisture from entering and destroying the components. When washing your recreational vehicle, inspect the seals for signs of drying out, cracking and wear. You should inspect and reseal, if necessary, every six months.

Check seals around doors, windows, vents and external seams. If a seal is cracked or dried out, it should be replaced to prevent leakage.

Check roof seals every six months to see if they are cracked or peeling.

Check engine covers and firewall every six months to see if they are cracked or peeled.

Be aware that weather, sun, and road vibration will affect seals, causing them to dry, crack, or separate. If you are unsure what to look for, have your dealer instruct you, and also show you the correct method for renewing the seals. If you prefer, they will be able to perform seal maintenance for your convenience.

The exterior of your motorhome is made of pre-finished aluminum and fiberglass. Wash it frequently with a mild soap and soft rag in lukewarm water. If you travel roads that have been salted for ice, wash your motorhome as soon as possible. The most common causes of corrosion are accumulation of road salt, dirt, and moisture in hard to reach areas under the motorhome. Make sure you wash the undercarriage and wheel wells as well as the exterior of the motorhome. A good automotive cleaner should be used occasionally to remove tree sap, road tar, insects and industrial pollution that may damage surfaces. Do not use naphtha or turpentine. We recommend that you wash your motorhome about every three weeks.

SLIDEOUT

Your motorhome may be equipped with a slide-out room for added space and comfort. Proper care and maintenance is required to achieve the maximum performance. Follow the guidelines listed below for your slide-out.

It may be necessary to lubricate the slide assembly (rollers, slide tubes, lever assembly) once a month with light oil to prevent rust buildup. This may be required more frequently due to road spray (salt, sand, dirt, etc.).

If you park your unit for long periods of time, run the room in and out 2–3 times to keep

the moving parts lubricated and the seals moving more freely.

Keep the slide room away from tree branches. Visually inspect the room and awning before retracting. Branches rubbing against the room while retracting could cause damage to the seals.

Whenever possible, wipe down the exterior walls before retracting the room to prevent water from draining onto the carpet.

The rollers under the slide room are not sealed rollers, therefore, some residue may appear on your carpet. This is a normal function, so be aware and take proper precautions. Vacuum the carpet after each extension of the slide out room.

Verify that your house batteries are fully charged before operating the room.

TIRES

In areas where the hot sun constantly beats down on the motorhome, shading the tires by covering can reduce tire sidewall cracks from forming. Tire covers can be purchased at any motorhome supply store. Check your Chassis Owner's Manual for the tire rotation requirements. Due to the weight of the motorhome you should have a qualified service center rotate the tires if recommended by your chassis manufacturer.

TV ANTENNA

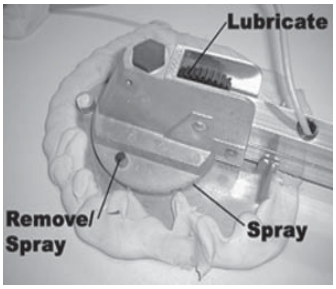

To lubricate the elevating gear, apply a liberal amount of silicone spray lubricant to the elevating gear with the lift in the down position. Run the lift up and down a few times to distribute the lubricant over the gears.

If rotating the antenna becomes difficult, lubricating the bearing surface between the rotating gear housing and the base plate can restore operation. Any spray type silicone lubricant may be used.

Elevate the antenna and remove the set screw from the rotating gear housing. Spray lubricant into the hole and around the edges of the gear housing. Rotate the gear housing until the lubricant coats the bearing surfaces and the antenna rotates freely. Replace set screw.

UNDERBODY

Buildup of mud under the body can cause rust, and can add unnecessary weight, which contributes to the gross weight of the vehicle. This effectively reduces the amount of cargo you can still carry and remain within your GVWR and GAWR limits.

Check the condition of the frame regularly. Keep it clean, and repaint as necessary to help avoid rust. Corrosive materials such as those used for ice and snow removal accumulate on the underside of the motorhome. These materials should be removed by flushing the underbody regularly with water, especially in areas where mud and other foreign materials collect.

WINDOWS

Make sure that all windows remain operative by adjusting and lubricating latches and moving parts annually. Use powdered graphite or light oil to lubricate moving parts on windows.

Vinyl seals around windows should be checked every six months, cleaned regularly and kept pliable by use of a silicone spray (make sure to follow the directions of the product).

Keep screens and window slides clean and free of debris to maintain proper operation and to avoid component damage. Test the operation of all windows occasionally to make sure they are working properly, making sure that they close flush and that the locks hold tight.

Check with your dealer if you are unsure about the correct methods of lubrication and adjustment.

NOTE Be aware that moisture can accumulate in locks and hinges of windows and doors, causing damage or faulty operation. Do not force the operation of these components in subfreezing weather.

HYDRAULIC FLUID

Check fluid levels. If levels are low, take to your dealer to have the motorhome serviced by a qualified RV technician.

The following instructions are guidelines for the care and maintenance of your motorhome. Please refer back to the products Owner's Manual for more information on the care and maintenance of that product.

APPLIANCES

Be sure to remove all food and ice from the refrigerator at the end of each trip. Prop the doors open slightly to keep the interior dry and free of mold, mildew, and odors.

Make sure to read all literature provided with each of the appliances and follow the maintenance instructions included. Pay particular attention to any cautions or warnings included.

BATH FIXTURES

Clean your tub/shower, sinks, and toilets as you would at home. A nonabrasive cleaner is recommended. When cleaning mirrors or shower doors, a vinegar and water solution works very well to remove hard water spots and stains.

BATHTUB SEAL

Inspect every 90 days and reseal as necessary. Use a clear silicone sealant.

BEDSPREAD & DRAPERIES

We recommend dry cleaning for your bedspread and draperies just as you would for your draperies and comforters at home. Although this is more expensive, proper care of material will help ensure a longer life. Care of headboard and bedroom valance fabric should be done with same instructions given for upholstery fabrics. Laundering and improper cleaning may result in fabric shrinking, fading or deteriorating prematurely. Read the label on the bedspread for proper cleaning.

CARPET

Professional cleaning is recommended for major cleaning. Frequent vacuuming is recommended to remove daily accumulations.

CO DETECTOR

Test the detector operation after vehicle has been in storage, before each trip, and at least once a week during use. Push the test button until a short beep (about 2 seconds) is heard. Release the button. The detector then resumes normal operation. In normal operation, the detector will flash the red LED once every thirty seconds.

HIGH PRESSURE LAMINATE COUNTERTOP

High-pressure laminate counter tops are quite easy to keep clean. Waxing is not necessary. Glass rings, food spills, water spots and smudges usually wipe off with a damp cloth or sponge. Stubborn stains can be removed with a spray cleaner. Laminated surfaces resist alcohol, fruit acids, cosmetics and most household chemicals. It is better

to avoid contact with dyes, strong laundry bleaches and bluing solutions. Indelible inks used on food packages may leave a stain so take care when unpacking groceries on a damp counter top.

Sharp knives can damage the finish so confine slicing to a good cutting board. The counter top resists moderate heat and boiling water. Pots and pans straight from the oven or broiler should be placed on hot pads. Keep irons on an ironing board and lighted cigarettes in an ashtray. For lasting beauty, avoid using harsh abrasives, scouring powders, peroxides or bleaches. These can dull surfaces, making the counter top more likely to accept stains.

HARDWARE

Wipe clean as you would for daily cleaning. Use a nonabrasive cleaner to avoid damaging the finish.

KITCHEN FIXTURES

To clean, wipe with a soft damp cloth. Warm water will remove dry water spots. Do not use cleansers which contain abrasive or harsh chemicals. Never use alcohol or other organic solvents.

MINI BLINDS & DAY/ NIGHT SHADES

Keep your blinds looking new by wiping with a soft cloth. Vacuum shades regularly. Use a mild detergent to spot clean if necessary. Close the blinds and shades all the way to properly clean inside and out.

SINKS

Clean with hot soapy water or a good liquid cleaner. Avoid using abrasive cleaners. Never use steel wool on stainless steel, since the steel particles left in the sink can rust and become unsightly. Also, when cleaning stainless steel with a mild cleanser, rub gently with the grain, and rinse well. Rinse after each use and wipe dry.

SOLID SURFACE COUNTERTOP

Preserve the luster by cleaning with a damp cloth and any household detergent designed for that purpose. To remove most stains, hard water deposits, cigarette burns and minor scratches use an abrasive cleanser or an abrasive pad such as 3M ScotchBrite brand green “Kitchen Scrub” pads. To remove deep stains and scratches use fine sandpaper (120 - 220 grit), then sand using (in the following order) 320, 400, and 600 grit sandpaper to restore the standard finish. A satin sheen or high polish can be obtained with polishing compounds.

Certain chemical substances can seriously mar surfaces even during brief periods of contact. If spilling occurs, wipe area off immediately, and then rinse with water. Potentially harmful compositions include: Toilet bowl cleaners, rust removers, contact adhesive solvent, ceramic cook top cleaners, paint or varnish removers, drain cleaners, metal cleaners, tile cleaners, lacquer thinners, or oven cleaners. Contact the manufacturer should you need further assistance.

UPHOLSTERY & FABRICS

Your RV is a small living area so soiling may occur more frequently and items will need more attention than your furniture at home. Please follow these guidelines for cleaning your upholstered fabrics:

- Do not use water based cleaners.
- If a spill does occur, blot up the spot, but do not rub it in. Some solvents are not recommended since they may have an adverse reaction on specific backings of your upholstery fabric.

- To prevent overall soiling, vacuuming or light brushing to remove dust and grime is recommended.
- Spot clean, using a mild water-free solvent or dry cleaning product.
- Clean only in a well-ventilated area and avoid any product containing carbon tetrachloride or other toxic materials.
- Pretest a small area before proceeding.
- Use a professional furniture cleaning service for an overall cleaning.

Your upholstery fabrics have been manufactured with the same quality you would expect to find in a furniture store. However, they are not completely resistant to possible damage. Special care is needed when your motorhome is exposed to very humid, or very hot climates or if it is closed up for an extended period of time. If you know you are going to be away, cover upholstery and make sure window coverings are closed to protect upholstery from any sun damage.

WALLCOVERINGS

Your decorative wall coverings are not much different from wallpaper that you may have in your home. They should be cleaned with mild soap and water. They can easily be maintained with proper care.

WINDOWS

Any glass will develop water spots if glass is not cleaned properly. This spotting effect is magnified when glass has a reflective finish. Use a squeegee immediately after washing to reduce water spotting. To remove stubborn water stains from reflective glass, there are several aftermarket specialty glass cleaners. The inside window track must be kept free of debris to keep the drain holes clear.

WOOD CABINETRY

These products should be cared for as you would any fine piece of wood furniture. Apply a furniture polish when you clean to maintain the natural beauty and luster of wood. This will keep your cabinets looking new and keep wood from drying out. Murphy's Oil Soap is a good choice for wood cabinets.

Chapter 11 - Winter Use and Storage

TIPS FOR WINTER USE

Many people choose to use their motorhomes throughout the entire year. Extensive usage is not recommended in severe cold weather. However, winter traveling can be safe for you and your motorhome if you follow the precautions outlined in this chapter. For those who choose to use their motorhomes only during the warmer months, winter storage is necessary. This section will guide you through the proper steps to winterize your motorhome, which is critical to maintain maximum durability over the life of your vehicle.

WATER SYSTEM

The fresh water storage tank is located inside a lower storage compartment. The furnace will heat the fresh and waste water compartments. In severe cold however, it is wise to monitor the water temperature in the tank, and take appropriate steps to drain and winterize if necessary. In severe cold weather, it may also be necessary to open the lower cabinet doors at night in both the bath and kitchen areas to keep warmer air circulating around the water fixtures.

If you are going to leave the coach unheated for any length of time in severe cold conditions, it is best not to keep water in the fresh water system. It may work best to carry cooking and drinking water with you in plastic jugs instead.

If you will be using your motorhome when conditions fall below the freezing level, it may be necessary to protect the drainage system components from damage by the addition of an approved antifreeze solution as outlined on the product directions. Any drain lines exposed to external air temperatures are especially susceptible to freezing and precautions should be taken to protect them from damage.

FOOD STORAGE

In the event that the motorhome is left for a period of time without the furnace in operation, canned goods and other foods packed in water should be stored as high as possible, since heat rises. They might also be stored in the refrigerator as insulation against the cold. Store dry foods, and other items that are not damaged by freezing temperatures in the lower storage areas.

PROPANE SYSTEM

Make sure to use an propane that will vaporize properly in the colder temperatures. Check with your propane representative for the proper fuel.

HEATING

Use only the furnace to heat the recreational vehicle. It is properly vented to the outside.

⚠WARNING Never use the range for heating as carbon monoxide may build up inside the unit and asphyxiation could result.

CONDENSATION

Cooking produces large amounts of moisture, not just as steam from pots and pans, but also as a product of combustion. Make sure to use the exhaust vents and open a window slightly to control the humidity. At night, leave a roof vent and/or a window slightly open.

WINTERIZATION PROCEDURE

When a motorhome is exposes to freezing temperatures, it could be severely damaged by ice expansion. This is especially true of the water heaters, washer/dryer, ice maker, holding tanks, and faucets, which are at risk for damage if not properly drained during the winter. All water must be drained from the motorhome. The procedure to do so is as follows:

- Drain the fresh water tank by opening the low point drain valve. Let the water drain out until the tank is empty.
- Drain both the black (waste) water tank and the gray (sink) water tanks and flush out completely. (See complete instructions located in Chapter 6 - “Plumbing Systems”). Drain the black tank first and allow the gray water tank to rinse out the flexible hose drain line. You may now add a commercial holding tank chemical cleaner. Driving the unit around for a few miles will allow the cleanser to circulate within the tanks and drains. Drain and flush once more with fresh water.
- After all the tanks have been drained, make sure that any water remaining in the lines is either blown out, or replaced with a nontoxic RV antifreeze solution which will prevent any water that remains from freezing. To blow out the water lines, proceed as follows:
    - Open all faucets including the toilet flushing device and the shower head sprayer. Open any other water lines that are closed. You will need access to an air compressor along with an adapter that will connect the air to your unit. These adapters can be purchased at an RV supply store. Do not exceed 55 psi when hooked up to the water lines to avoid damage. If your vehicle is equipped with a water filter, remove and drain it before proceeding. Replace it with a diverter tube, which will come with the unit. This will create a bypass in the water line so that the antifreeze will not go into the filter assembly.
    - Turn on the water pump and allow it to run to clear all water from lines. Turn off the water pump.
    - Open all low point and water tank drains.
    - Open the water heater cover and remove the water heater drain plug located on the lower front side of the water heater (see photo).
    - Hook an air hose to the city water connection located in the termination compartment. Blow out the water lines (do not exceed 55 P.S.I.) until no more water can be seen coming out of the lines. Pause for several seconds and repeat until clear.

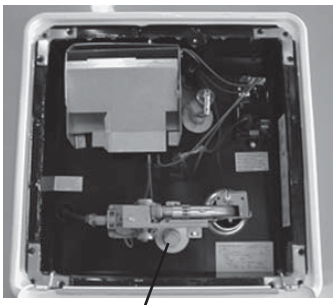

Water Heater Drain Plug

- Put nontoxic RV antifreeze in the drains, p-traps, and water tanks.
- If you do not have access to an air compressor, you may use the “wet” method of winterization:
    - After you have completely drained all the tanks, water heater and lines by opening the low point drains and switching the water heater bypass valves to the bypass position (if equipped-see page 77), close the low point, water tank and the water heater drains.
    - Pour 4-6 gallons of RV antifreeze into the fresh water tank and let the water pump circulate the mixture. Do not dilute.

• Open the furthest faucet or water valve from the pump and work your way through the entire system. Turn on one (hot and cold) at a time until the antifreeze solution is observed, then close the valve. Allow at least 2 cups to pass through for complete protection. Make sure to include all water lines such as showers and tubs, toilet, washing machines, dishwashers, ice makers and outside shower faucets. The antifreeze should be left in the sink, washer and shower p-traps and toilets during storage to protect those lines. Open all faucets one half way to relieve pressure on the valve seats during storage. Wipe all fixtures clean to prevent staining.

⚠WARNING Antifreeze must be nontoxic in nature and must be flushed from the fresh water system before human use. Automotive antifreeze is poisonous and SHOULD NOT be used in drinking water systems.

Draining the tanks and water lines in your motorhome is half the battle of winterization. Complete the Storage and Winterization Checklist (page 78) to ensure protection of your motorhome. An authorized Damon service dealer can help you in the winterization process for your convenience.

WATER HEATER BYPASS

A water heater bypass valve system is located inside your motorhome usually behind the water heater. When the system is closed, water is shut off to the water heater. This will eliminate circulating an additional six to ten gallons of antifreeze through the water heater system when winterizing the system. Be sure to remove the drain plug from the outside of the water heater to drain the water heater tank.

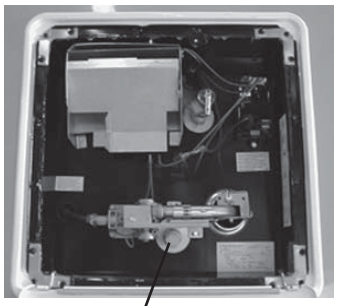

Water Heater Drain Plug

When storing your motorhome for the winter (or other extreme conditions), certain precautions need to be made to protect it until you open it up again for use. Make sure to talk with your local dealer concerning any special requirements for storage in your particular geographic area. The following steps are general, and your dealer can help you choose those that are most appropriate for your needs.

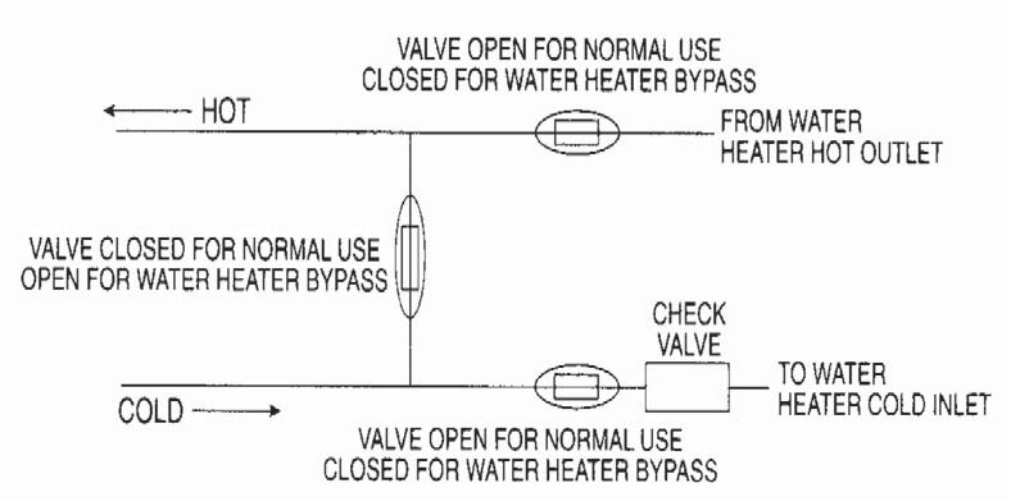

WINTERIZATION CHECKLIST

Chassis – Run engine for 30 minutes once a month if possible. Prepare as outlined in the Chassis Owner's Manual.

Generator – Prepare as outlined in the Generator Owner's Manual.

Plumbing Lines – Drain and protect by filling with approved RV antifreeze. (See pages 76-77)

Water Heater – Drain. (Pages 76-77)

Toilet – Drain. Hold pedal down and pour RV antifreeze into bowl.

Fresh Water Tank – Drain, pour RV antifreeze solution and run through the fresh water system, or use the dry method (pages 76-77).

Water Filter – Remove and discard the filter. Install diverter tube in place of filter assembly.

Body – Clean and wax. Oil locks and hinges. Seal roof trim as needed.

Tires – Block up motorhome with wooden blocks or manufactured jack-stands on a hard level surface to relieve the constant pressure on one area of the tires. Partially deflate the tires. Cover to protect against sunlight with burlap, plywood or specially designed tire covers which are available at RV dealerships.

Countertops and Cabinets – Wash with mild soap and water.

Curtains and Blinds – Close all the drapes and curtains, and protect the curtains from sun fading by placing foil or paper between the windows and the curtains/blinds.

Windows – Close and lock. Inspect and reseal if necessary.

Holding Tanks – Drain and rinse. Close valves. Add a small amount of RV antifreeze to keep valves and gaskets lubricated.

Drain Traps – Pour a cup of RV antifreeze down all drains. Wipe all fixtures clean.

Refrigerator – Clean. Leave both doors propped open. Cover exterior panels and roof vents. Leave an opened box of baking soda inside the refrigerator to prevent any musty odors from accumulating.

Ice Maker – Refer to your refrigerator owner's manual for proper winterization procedures.

Air Conditioner – Remove air filters and clean or replace. Cover shroud.

Roof – Must be kept clear of significant snow accumulation or damage may occur. Inspect and reseal if necessary.

Vents – Check all furnace, refrigerator, range hood, A/C, etc. vents and close securely. Cover or tape up to prevent mice or insects from building nests that can disturb the air flow and keep the appliances from functioning properly.

Sinks and Showers – Clean and then pour one cup of nontoxic RV antifreeze into the drains to prevent freezing. Wipe all fixtures clean.

Batteries – Add distilled water and recharge if necessary. If possible, remove batteries and store them in a cool dry place (approximately 50 – 60° F). Check them periodically and recharge as needed. Be sure that both the chassis and auxiliary (house) batteries have the proper electrolyte level and that they are fully charged. A discharged battery will freeze and may crack the case, causing severe damage to the battery and surrounding area. In storage, a battery will lose charge gradually over a 30 to 45 day period, even when disconnected by the use of the Battery Disconnect Switch. We recommend that the batteries be checked for charge at least monthly. You may wish to remove the batteries from the motorhome and store them in a heated area. However, even when warm, the battery charge level must still be maintained. A warm battery accepts charge much more readily than a cold one.

⚠WARNING Keep the battery vent caps in place during storage and prohibit smoking, welding, and other work involving the use of flames in the area.

Fuel – Store with the tank full to prevent condensation buildup.

Dash Air Conditioner – Run for a short period of time to assure the compressor seal is lubricated.

Interior – Check the interior of the motorhome monthly while in storage to make sure leaks have not developed, or condensation has not formed that can cause damage to interior components. Condensation can most readily be observed as moisture accumulation on windows and mirrors. To reduce condensation, make sure to air out the motorhome occasionally during storage.

Maintenance Schedule

ITEM	EVERY TRIP	EVERY MONTH	EVERY 3 MONTHS	EVERY 6 MONTHS	EVERY YEAR	PRIOR TO STORAGE	AS REQUIRED	PROCEDURE TO BE PREFORMED: Maintenance schedules are minimum requirements. Heavy use, unusual temperatures or humidity, or other extreme conditions may require more frequent maintenance.
Roof & Components				x		x	x	Inspect & reseal roof & exterior attachment areas.
			x					Clean roof.
					x		x	Lubricate roof vent mechanism w/ light oil. Clean as needed.
Fiberglass Exterior		x						Wash w/ warm water & mild detergent.
					x			Wax w/ liquid or nonabrasive wax.
Windows & Doors		x						Check vinyl seals when washing exterior.
			x					Check seals for damage & repair as needed.
			x					Lubricate door hinges & step components w/spray grease.
					x			Adjust & lube w/ graphite or light oil.
					x			Lubricate door locks & strike pockets, exterior components.
Seals & Adhesives		x						Inspect and reseal if necessary.
Propane System					x		x	Check for leaks and damage.
					x			Check line pressure; should be checked by technician.
Water System		x						Check hoses, fittings & connections for leaks.
	x							Check drainage system for leaks.
					x	x	x	Sanitize & flush system.
					x			Winterize system if necessary.
Electrical System		x						Check GFCI circuits.
							x	Perform maintenance procedures per generator manual.
							x	Check & service batteries.
							x	Add distilled water to batteries if necessary.
Safety Equipment	x							Test propane, smoke, CO detectors.
	x							Test & check fire extinguisher.
Carpet	x							Vacuum after every trip.
							x	Shampoo as needed.
Front Wheel Alignment							x	Inspect and align as needed.
Seats							x	Lubricate mechanisms & inspect for proper operation.
							x	Check all seat belt buckles, webbing & releases.
Chassis & Components							x	Per chassis manufacturer manual.
	x							Check fluid levels including: oil, brake, washer, engine coolant, transmission, battery water, etc.
Power Step			x					Clean & lubricate with spray lithium grease.
Weight & Distribution	x							Check for proper weight distribution per specifications.
Fabrics & Upholstrey							x	Clean per manufacturer's specifications.
Tires	x							Inspect for wear & proper inflation.
	x							Check all wheel lug nuts and tighten per chassis specifications
Appliances							x	As required by appliance manufacturer.

Travel Preparation Checklist

CLOTHING
Dresses
Gloves
Hat or Cap
Jackets, Coats
Jeans, Dress Pants
Pajamas
Shirts, Blouses
Shoes, Sandals
Shorts
Socks
Sweaters
Swimsuits
Undergarments

TOOL CHEST
Electrical Tape
Step Ladder
Furnace Duct Tape
Hatchet
Masking Tape
Saw
Shovel, Rake
Small Level
Tire Pressure Gauge
Various Tools

HOUSEKEEPING
Dish Cloths, Dish Towels
Dish washing Soap
Disposable Gloves
Garbage/ Trash Bag
Mop, Broom, Dust Pan
Paper Towels
Surface Cleaner, Degreaser
Throw Rug
Trash Cans
Vacuum Cleaner

SAFETY
Compass
First-Aid Kit
Flares
Flashlights
Reflectors

SLEEPING GEAR
Blankets
Pillows, Pillow Cases
Sheets
Sleeping Bags

PERSONAL COMFORT
Anti-Bacterial Wet Wipes
Ash Tray
Personal Medications
Personal Toiletries
Sewing Kit, Scissors
Soap
Sunscreen
Toilet Paper
Toothbrush, Toothpaste
Towels, Wash Cloths

MEAL PREPARATION
Baking Pans
Bottle Opener, Can Opener
Coffee Maker
Foil, Plastic Wrap
Glasses, Cups
Plastic Containers
Plates, Bowls
Portable Grill
Pots, Pans, Skillets
Salt & Pepper
Seasonings, Spices
Silverware, Spatulas, etc.
Toaster

ENTERTAINMENT
Binoculars
Books, Magazines
Camcorder
Camera, Film, Memory Card
Movies
Music/Cd's
Toys, Games, Playing Cards
VHS Player, DVD Player
Yard Games

MISCELLANEOUS
Alarm Clock
Batteries
Bucket
Clothes Hangers
Clothes Line, Clothes Pins
Electronics Chargers
Fresh Water Hose
Fuses
Ground Extension Wire
Umbrella
Wheel Chocks
Y-Type Water Hose Fitting

CAMPFIRE COMFORT
Bug Repellent
Bug Zapper
Charcoal
Enclosed Screen Tent
Firewood
Grill
Matches
Picnic Table Cloth w/ Clips
Yard Chairs

PET COMFORT
Food & Water Dish
Leash
Litter
Litter Box
Pet Food
Portable Cages
Scoop w/ bags
Screw Stake for tie out
Tick Repellent
Tie Out Cable
Toys

OTHER
_____
_____
_____
_____
_____
_____
_____
_____
_____

Maintenance Schedule

Date	Service Preformed	Mileage	Date	Service Preformed	Mileage

Maintenance Schedule

Date	Service Preformed	Mileage	Date	Service Preformed	Mileage

Date	Mileage	Fuel (Gallon)	Oil (Quarts)	MPG

Date	Mileage	Fuel (Gallon)	Oil (Quarts)	MPG

Date	Mileage	Fuel (Gallon)	Oil (Quarts)	MPG

Date	Mileage	Fuel (Gallon)	Oil (Quarts)	MPG

Notes

Notes

BATTERY CONTROL CENTER

Checking the fuses.

- The Battery Control Center is built in two layers, the printed circuit board and the relays. The box has been designed so that nearly all troubleshooting can be done without the removal of the printed circuit board. Have a Damon dealer remove the circuit board if necessary.
- Remove the outer cover.
- Check fuses visually or with an electrical tester.
- Check for power on both sides of the fuse.
- Replace the fuse with a new one of the same ampere.

Battery boiling.

- Water low in battery. Refill water to correct level in battery, using distilled water.
- Bad battery. Replace the battery with new.
- Defective converter. Have converter checked by a qualified RV technician.

NOTE Continuous use of converter can cause evaporation of electrolyte in battery.

ELECTRICAL POWER

No AC power to unit.

- Check circuit breakers at power center. The 120 Volt circuit breaker may be off or tripped.
- Have a dealer check that there is power to the shoreline receptacle.

ELECTRICAL STEP

Electric step does not operate.

- Verify that step switch is in OFF position.
- Check battery voltage. Recharge or replace as needed.
- Check door switch alignment. Realign or repair if necessary.
- Check 25 Amp fuse in the battery control center.
- Check step frame for damage or misalignment. Replace if necessary.
- Lubricate step assembly with a lithium spray grease if necessary.

Step operates intermittently.

- Check door switch alignment. Realign if necessary.
- Check step frame for damage or insufficient lubrication. Replace or lubricate if necessary.

FURNACE

Furnace does not ignite and/or cycles frequently.

- Check that propane tank is full.
- Remove any obstruction over furnace exhaust.
- Inspect exhaust tube for any obstructions.
- Check fuse in fuse panel and replace if necessary.
- Make sure that return air grill is unobstructed.
- Remove anything that is stored in furnace compartment that could block air flow.

- Check that heat outlet registers are open and that register openings are unobstructed.
- Contact a Damon dealer if the problem persists.
- Make sure that 12 Volt power is present.
- Point the remote at the air conditioner to ignite the furnace.
- Furnace does not light and fan does not run.
- Replace fuse with one of the same ampere rating.

⚠WARNING Turn thermostat and furnace gas control valve off and contact your dealer or an authorized service center. DO NOT attempt to repair or adjust the furnace yourself.

GENERATOR

Starter engages while holding the start button down, but generator does not start.

- Generator may be out of fuel. Check the chassis fuel level. (Generator will not operate when the chassis fuel tank is less than 1/4 full).
- Generator may be low on oil. Check the oil level.

Nothing happens when the generator start button is pushed.

- Check that the battery disconnect switch is in the USE position.
- Check 12 Volt fuse on generator.
- Reset circuit breaker if necessary.
- Contact a Damon dealer or qualified RV technician if problem is not resolved.

Generator starts, but lacks electrical power.

- Breaker switches may be off or tripped at generator. Reset breaker if necessary.
- Breaker may be off or tripped inside power center. Reset main breaker If necessary.

Generator makes clicking sound when trying to start.

- Battery condition may be low. Recharge if necessary.
- Check for poor ground or battery connection.

INTERIOR LIGHTS

Lights flicker.

- Loose or defective bulb. Tighten or replace as needed.
- Converter is overheating. Open the cover to cool down and reduce the load by turning off some 12 Volt lights.

Lights dim or are half bright.

- Low battery condition. Check battery condition and recharge if necessary.
- Possible converter malfunction. Have converter checked by an authorized service center.
- Possible loss of ground. Check for loose wire connection.

LEVELING JACKS

Jack retracts after coach is level.
- Check tank reservoir for the proper fluid levels.
- Hose or jack may have an external leak.
- Fluid is leaking back to reservoir through the control valve.

Jacks will not retract completely.
- Jack may be clogged with ice or mud.
- Main rod is bent or scored. Have replaced or repaired if necessary.
- Valve plunger is not completely depressed by the valve handle.
- Spring is weak or broken.
- Hydraulic line is pinched.

Ignition switch is on, but no power to pump and/or control panel.
- Parking brake is not set.
- 12 Volt from power source is not available. Check the in-line fuse under the dash by the O.E.M. fuse panel.
- Faulty wire or electrical connection. Have checked by a qualified service technician.

Pump will not activate.
- Grounding switch on valve is not working.
- Pump relay not functioning.
- Pump not grounded.

Hydraulic pump activates without use of control valve pad.
- Grounding switch at valve may have shorted.
- Pump relay may be stuck.
- Relay control wire shorted to ground.
- Oil supply is low in reservoir.
- Store levers not in the operate position.
- Pump is not developing pressure.
- Broken hydraulic line.

Yellow leveling lights are not functioning properly.
- Yellow lights will not go out when vehicle is level. Adjust the sensing unit located under the main body floor in a center storage compartment. See your manufacturers manual.

Red warning lights are not functioning properly.
- Lights will not come on: check for broken wire at warning switch on the jack.
- Lights will not go out: faulty warning switch or wires are shorted to the ground.

PROPANE GAS

Smell gas in or around unit.

- Propane tanks may be overfilled.

⚠WARNING Working with propane can be dangerous.

Follow these instructions:

- Extinguish any open flames, pilot lights and all smoking material.
- Do not touch electrical switches.
- Shut off gas supply at the tank valve or gas supply connection.
- Open doors and other non-powered venting openings.
- Leave the area until odors clear.
- Have the gas system checked immediately and leakage source corrected by a Damon dealer or qualified service center before using again.

MICROWAVE

Will not operate.

- Door open or timer OFF. Close door and turn timer ON.
- No power to oven. Check power supply and circuit breaker.

MONITOR PANEL

No lights on panel when switch is pressed.

- Check battery voltage and condition.
- Check fuse in the Battery Control Center labeled BD RELAY; if fuse is good have a Damon dealer or a qualified RV technician check the condition of panel.

Holding tank lights deliver false readings (i.e., 1/3 or 2/3 indication).

- Verify tank is empty.
- Debris may be built up across probes. Clean and flush tank using four parts vinegar mixed to two parts water.

Propane indicator display indicates E or F all the time.

- Ensure propane gas tank is full.
- If display is F, check the wiring or sending unit for malfunction.
- Have it inspected by a certified technician.

OUTSIDE RECEPTACLE

No power to outside receptacle.

- Make sure you have power to the shoreline.
- Check breaker on generator.
- GFCI receptacle switch may be off or tripped. Reset GFCI at receptacle in bathroom or kitchen.
- Check the breaker in the power center or panel box.
- Contact a Damon dealer or a qualified RV technician if problem is not resolved.

OVEN

Oven slow to heat up.
Poor baking.
Poor ignition of burners.
Pilots won't stay lit.

Popping sound from top burners.
Carbon on pilot shield.
Burner flame too low or too high.

- A defective gas pressure regulator may cause these conditions. Have the regulator tested by your gas dealer or a certified RV technician.

Top burner or oven burner won't light or won't stay lit.

- Check position of top burners and flash tubing.
- Clean clogged burner ports with a toothpick.
- See Oven Owner's Manual for proper care and maintenance.

Gas smell.

- Check all connections with leak detector solution.

⚠WARNING Never Use a match or flame to check for leaks.

⚠WARNING All propane connections should be checked periodically as vibrations from travel may cause them to loosen.

Food burns on the bottom.

- Oven too full for proper circulation. Use smaller pans or put less food in the oven.

POWER INVERTER

Inverter does not work.

- Be sure the batteries are properly charged. If the batteries are low, they will trip the breakers on the inverter or force the inverter into low voltage drop out.
- Reset the breakers on the inverter or reset inverter control.
- The 2000 watt operates the GFCI circuit, the front TV entertainment center, rear TV and the microwave and general outlets.

REFRIGERATOR

The control panel lights are not illuminated.

- Check coach circuit breakers and GFCI receptacle.
- Verify that refrigerator is plugged into the 120 Volt outlet.
- If using propane gas, verify house batteries have adequate charge.

Lights are illuminating, but no cooling.

- Use a proper power source that is available and cooling operation to specification.
- Make sure the refrigerator unit is level.
- Allow sufficient time for proper cool down and try to load with precooled food.
- Have a qualified RV technician check that the vents and chimney at the rear of the refrigerator are clear and unobstructed.
- Have a qualified RV technician make sure the burner jets or burners are not dirty or damaged.
- Have a qualified RV technician check the fuses in the black electrical box on the rear of the refrigerator.

⚠WARNING Extinguish all flames. Never use a match or flame to check for leaks.

Heavy frost build up on evaporator fins.
- Defrost the freezer and refrigerator.
- Have the refrigerator checked by your Damon dealer or a qualified RV technician.

ROOF AIR CONDITIONER

Will not operate.
- Make sure unit is turned on.
- Check circuit breakers in coach.
- Have a Damon dealer check to see if there is proper voltage from shoreline or generator.

Unit runs, but coil freezes and compressor cycles too soon.
- Control setting may be too low, cycles too soon.
- Make sure the filter is clean and unobstructed.
- Have the coolant level checked by a qualified service facility.

Does not get cold enough.
- Start unit before the day gets too hot.
- To offset heat gain:
  - Close all windows and blinds.
  - Keep entrance doors closed.
  - Use awnings
  - Avoid using heat-producing appliances.
- Make sure the outside coil is not blocked or damaged.
- Have a Damon dealer check to make sure you have the proper voltage.
- Should your A/C still not work after the above checks have been made, contact a qualified service facility to perform more extensive testing.

⚠WARNING Working with electrical appliances can be extremely dangerous.

RUNNING LIGHTS

Running lights not working.
- Blown fuse. Replace fuse with one of the same ampere rating.
- Bad bulbs. Replace the bulbs with new.

SATELLITE DISH

Dish does not rotate or is hard to rotate.
- Check antenna on roof, make sure that the mount has not been damaged.
- Check for caulking between gear housing and base plate.
- Be sure cables are not binding.

Dish does not raise or is hard to rise.
- Check antenna on roof, make sure that the mount has not been damaged.
- Check for caulking on elevating shaft.

Poor Reception.

- Have you entered your correct current location zip code?
- Do you have the TV tuned to channel 3 or 4? (Same channel as the output of the receiver)
- Be sure there are no trees, buildings, mountains, etc. in the line of sight to the satellite.
- Check connections at the receiver, TV and antenna.
- Fine tune reception by slowly moving the antenna left, then right until you find the position that gives the highest signal strength. It is important that you turn the antenna slowly. The signal is digital and it takes a few seconds to lock on.

SLIDEOUT

Room moves in and out very slowly, binds or squeaks.

- Grease the slide-out tubes and rollers.

Grease marks appear on the carpet where the rollers are located.

- The rollers are not a true sealed roller, so this may happen over time. Take precautions when lubricating.

Water is getting in at the bottom corners of the room.

- Verify the exterior seals are against the room at the top corners and not turned in when room is out. Also, check for voids in the seal on the roof.

Room will not move in or out.

- Ensure ignition switch is in the OFF position.
- Check the auto-resetting fuse located by the slide out motor. (See the manufacturers manual)
- Check battery condition and state of charge. Recharge if necessary.

Rollers leave tracks in the carpet as the room extends.

- This is normal. There are many pounds of weight pressing these rollers down on the carpet and rollers will compress the nap of the carpet down. Raking the nap or vacuuming will solve the problem.

TERMINATION VALVE

Termination valve leaks.

- Debris keeps valve from seating. Clear debris from and around valve O-ring set.
- Bad gasket. Have a Damon dealer or a qualified RV technician replace gasket with new.

TV ANTENNA

Poor TV reception.

- Power jack is not turned on. Turn power jack switch to ON.
- Bad connections at TV or wall plate. Make sure the connections are good at both TV and wall plate.
- Antenna not pointed in direction of sending station. Point antenna in proper direction.

- Cut or torn cable. Have a Damon dealer or a qualified RV technician replace bad cable where needed at TV and antenna.

Elevation handle turns, but antenna does not raise or lower.

- Handle may be loose. Tighten screws.
- Gears may be stripped. Have a Damon dealer or a qualified RV technician replace the gears.

Antenna will not rotate.

- The rotate handle is engaged to the ceiling plate. Pull down on handle to disengage from the ceiling plate.
- Possible obstruction (tree branch, etc.). Remove obstruction.
- Friction adjustment. Adjust center lock nut.
- Design of antenna limits rotation to 350°. Adjust as necessary.

WASTE TANK

Waste tank (black) will not drain.

- Buildup or debris in tank. Check for buildup in tank at stool.
- Always use a minimum amount of biodegradable toilet paper.
- Always use plenty of water when flushing.
- Check termination valve for proper operation.

WATER HEATER

Temperature-pressure relief valve weeping.

- Weeping or dripping of relief valve while water heater is running does NOT mean it is faulty.

There is an odor that smells like rotten eggs.

- If your fresh water source has a rotten egg odor, you will need to find another source of fresh water before flushing and refilling the entire RV water storage system. To remove the hydrogen sulfide (rotten egg) odor:
- Turn off your main water supply; that is your pump or your water hookup source.
- Drain your water heater tank by removing the drain plug. Approximately two quarts of water will remain in the bottom of the tank. If you notice during the draining that the water is flowing sporadically or slowly, instead of flowing freely, you should open your relief valve to allow air into the tank.
- If the water does not flow freely, take a small gauge wire or coat hanger and push through the drain opening to eliminate any obstructions.
- After thoroughly draining the tank, flush the entire system from the water inlet all the way to the holding tank. To flush, use four parts of vinegar mixed with two parts of water. If you decide to use air pressure (55 PSI max.), it may be applied either through the inlet or outlet on the rear of the tank. It may also be applied through the relief valve port. In this case, it will be necessary to first remove the relief valve. You may then insert your air pressure through the relief valve support flange. In either case, with the drain valve open, the air pressure will force the remaining water out of the tank. If air pressure is unavailable, you may flush your tank with fresh water.

Fresh water should be pumped into the tank with the assistance of the on board water pump or with the assistance of external water pressure. Once again, external pressure may be pumped into the unit either through the inlet or outlet found on the rear of the water tank, or using the relief valve inlet located on the front of the unit.

- Continue this flushing process for approximately five (5) minutes allowing ample time for the fresh water to agitate the stagnant water on the bottom of the tank and force the deposits through the drain opening.
- Upon completion of the steps above, close the drain plug as well as the relief valve. Refill with fresh water, circulate and rinse.
- If you use your vehicle frequently or for long periods of time, flushing the water heater several times a year will prolong the life of the water heater storage tank.

WATER PUMP

Pump will not start.

- Check that house battery disconnect switch is on.
- Check pump switch at monitor panel.
- Check fuse in power center.
- Check to see if water is frozen.

Will not prime, sputters. (No discharge, but the motor runs.).

- Check to see if there is water in the tank, or if air collected in the hot water heater.
- Check for frozen water lines or water tank.

Pump will not shut off. Runs when faucet is closed.

- Turn off pump or city water supply.
- Check for damp areas around plumbing appliances.
- Check plumbing for leaks and inspect for leaky valves on toilet.
- Have the pump checked by your Damon dealer or a qualified RV technician.

WATER SYSTEM

Wet areas near water connections, pump runs while the faucets are closed, and no other fresh water fixtures are being used.

- There is a possible leak.
- Close all low point water drains and tank drains.
- Turn off all fixtures.
- Check all fixtures and connections for tightness. Do not over tighten fittings as this may cause additional leakage.

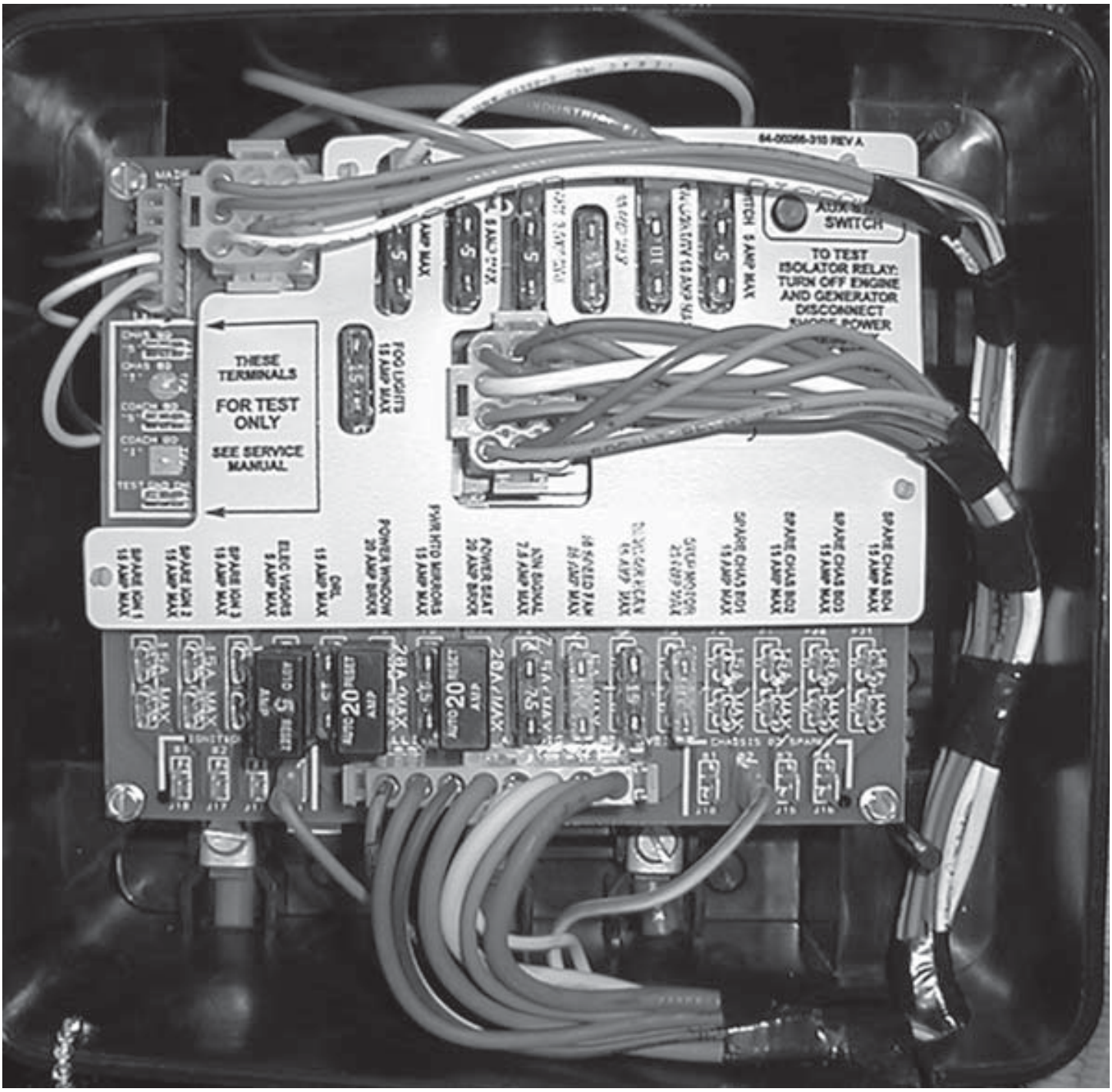
TO TEST
ISOLATOR RELAY:
TURN OFF ENGINE
AND GENERATOR
DISCONNECT
THESE
TERMINALS
FOR TEST
ONLY
SEE SERVICE
MANUAL
SPARE CHAS BD4
15 AMP MAX
SPARE CHAS BD3
15 AMP MAX
SPARE CHAS BD2
15 AMP MAX
SPARE CHAS BD1
15 AMP MAX
POWER SEAT
20 AMP BUSS
POWER WINDOW
20 AMP BUSS
DRL
15 AMP MAX
ELEC VISORS
5 AMP MAX
SPARE IGN 3
15 AMP MAX
SPARE IGN 2
15 AMP MAX
SPARE IGN 1
15 AMP MAX

Electrical Diagrams

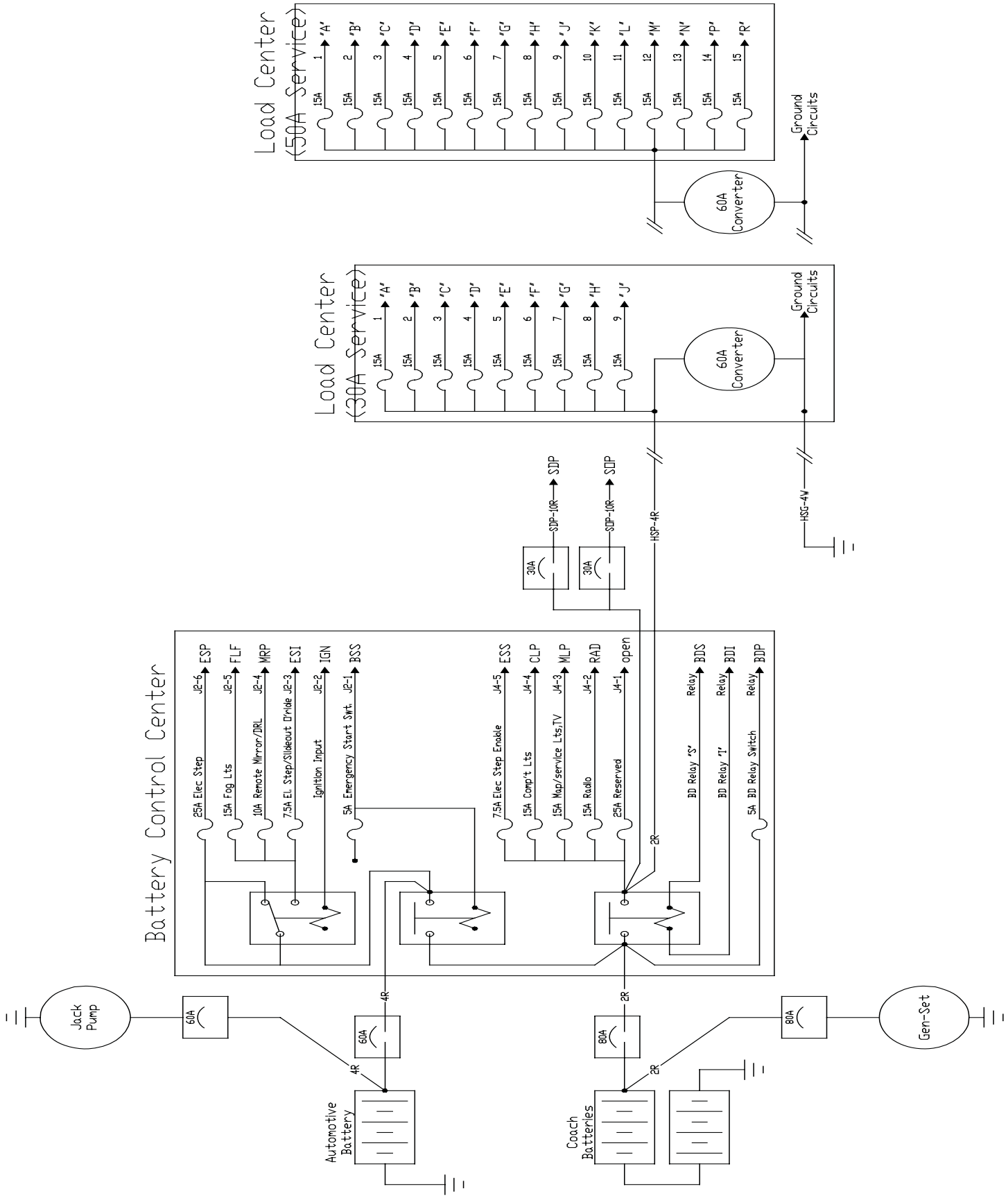

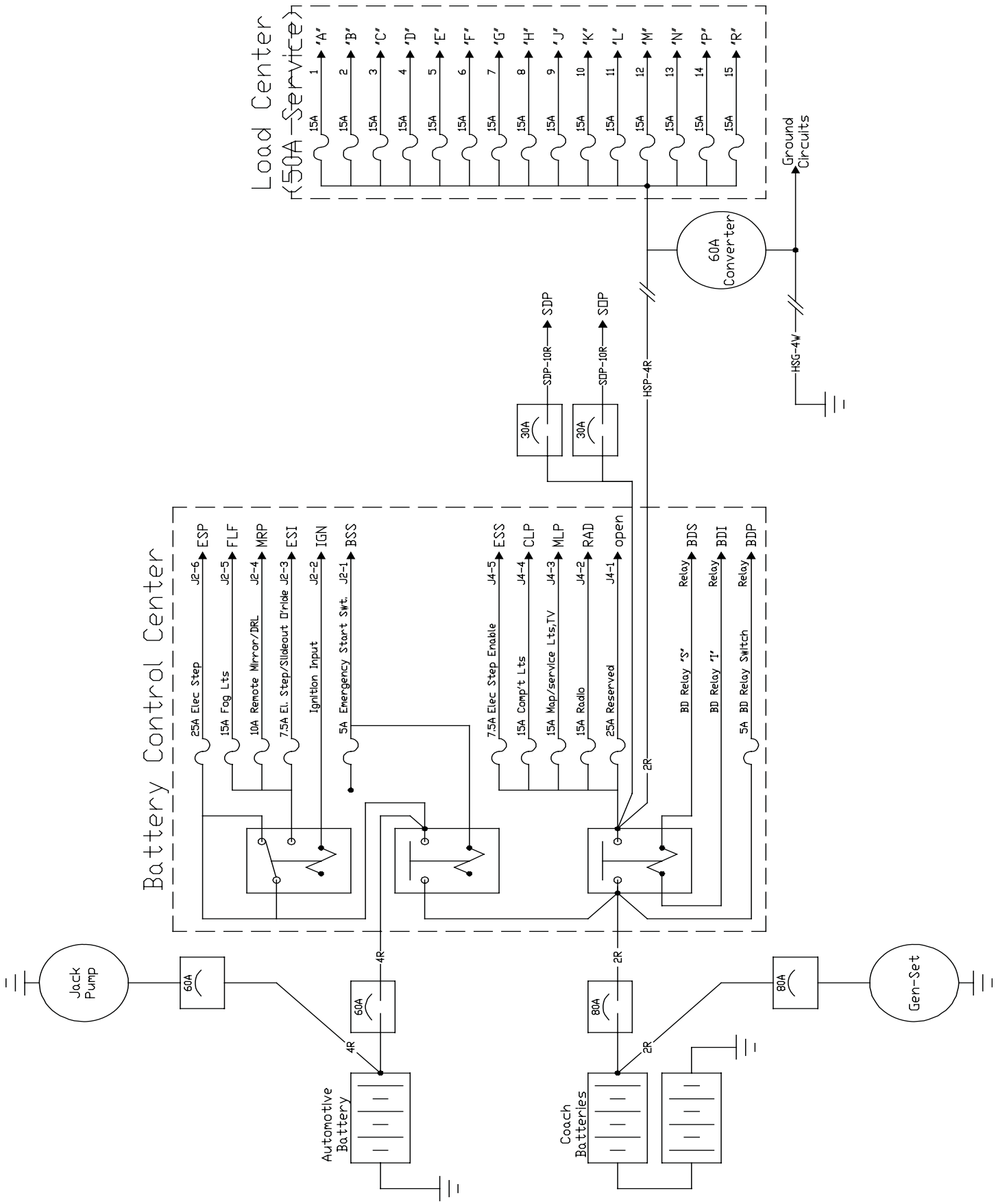
Load Center
(50A Service)
"A" 1 15A
"B" 2 15A
"C" 3 15A
"D" 4 15A
"E" 5 15A
"F" 6 15A
"G" 7 15A
"H" 8 15A
"J" 9 15A
"K" 10 15A
"L" 11 15A
"M" 12 15A
"N" 13 15A
"P" 14 15A
"R" 15 15A
Ground Circuits
60A Converter
HSG-4W
HSP-4R
SDP-10R
SDP
30A
30A
Battery Control Center
J2-6 ESP
25A Elec Step
J2-5 FLF
15A Fog Lts
J2-4 MRP
10A Remote Mirror/DRL
J2-3 ESI
7.5A El. Step/Slideout D'ride
J2-2 IGN
Ignition Input
J2-1 BSS
5A Emergency Start Swt.
J4-5 ESS
7.5A Elec Step Enable
J4-4 CLP
15A Comp't Lts
J4-3 MLP
15A Map/service Lts,TV
J4-2 RAD
15A Radio
J4-1 open
25A Reserved
2R
Relay BDS
BD Relay "S"
Relay BDI
BD Relay "I"
Relay BDP
5A BD Relay Switch
Jack Pump
60A
4R
60A
4R
Automotive Battery
80A
2R
2R
Coach Batteries
80A
Gen-Set

Electrical Diagrams

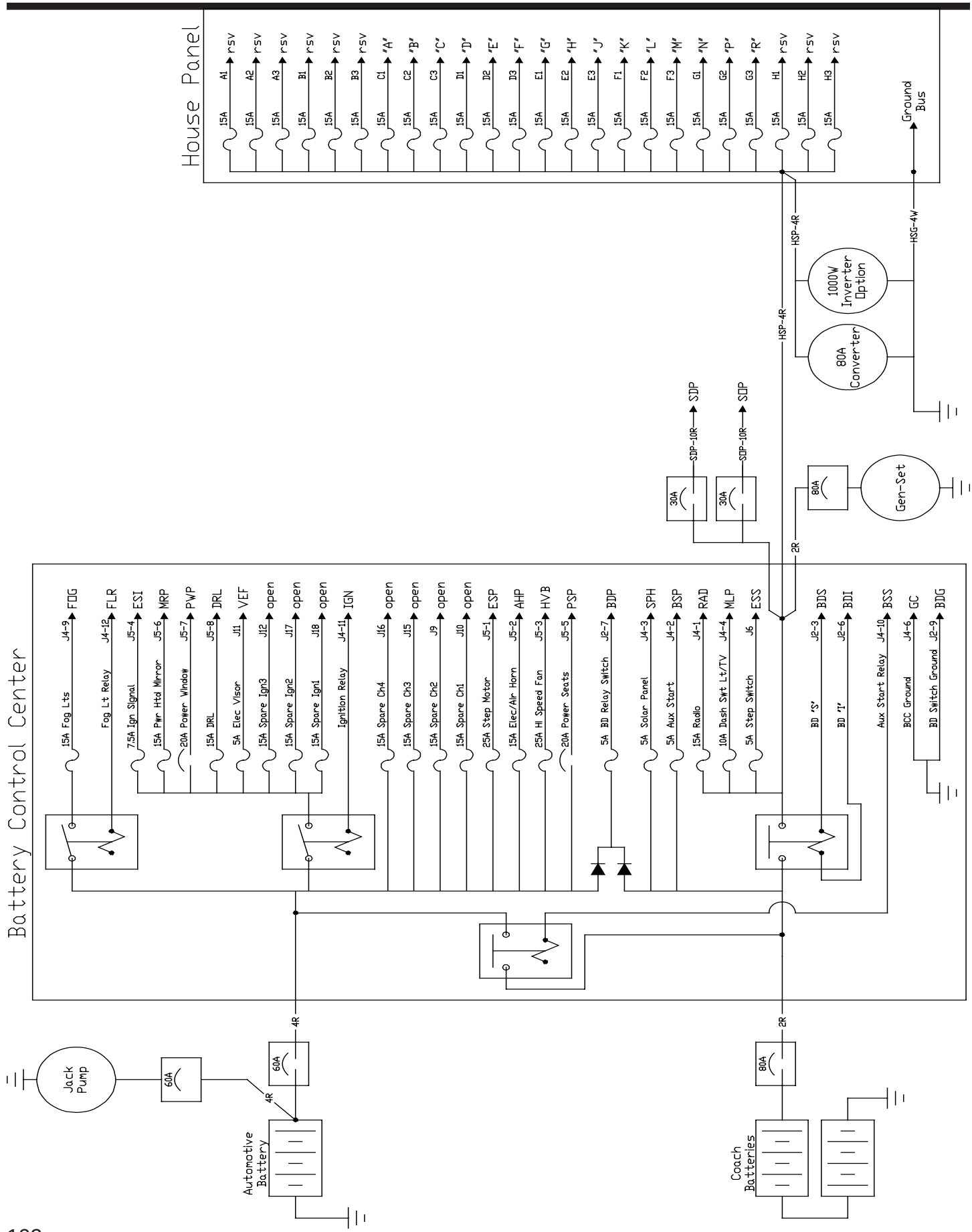

Hutch Decor Lt
House "D"
"Hutch Lt"
HPD-14PK
HCH-14D
G4
Hallway
Toilet Room Lt
House "D"or"F"
"Ceiling Lt"
HPD-14PK
HPF-14D
WCL-14GN
G4/G6
Toilet
Storage Compartment Lts
House "G"
"Storage Lt"
HPG-14GN
CLS-14VT/BK
GC
Stepwell
Bedroom Ceiling Lt (3 way)
House "B"
"Ceiling Lt"
HPB-14BL
BRX-14TN/BK
BRL-14R
Hallway
BRL-14R
G2
"Ceiling Lt"
Bedroom
Lavy/Ceiling Lt
House "D"or"F"
"Ceiling Lt"
HPD-14PK
HPF-14D
BTH-14Y
G4/G6
Bathroom
Vanity Lighting
House "G"or"K"
"Vanity Lt"
HPG-14GN
HPK-14Y
VLS-14D
G7/G10
Bedroom
Patio/Off-door Lts
House "A"
"Patio Lt"
HPA-14BK
PLS-14R
OLS-14GN
G1
GX
GC
Stepwell
LP Valve
House "J"
"LP Valve"
HPJ-14R
LSX-14TN
LSS-14BL
GX
GC
Exterior
Hallway
Bedroom Ceiling Lt
House "B"
"Ceiling Lt"
BRL-14R
G2
Bedroom
Dinette Ceiling Lt
House "D"
"Ceiling Lt"
HPD-14PK
DLS-14BL
G4
Dinette
Patio Lt
House "A"
"Patio Lt"
HPA-14BK
PLS-14R
G1
Stepwell
Livingroom Ceiling Lts
House "A"
"Ceiling Lt"
HPA-14BK
LVX-14PK
LVR-14BR
G1
Stepwell
Hallway

Electrical Diagrams

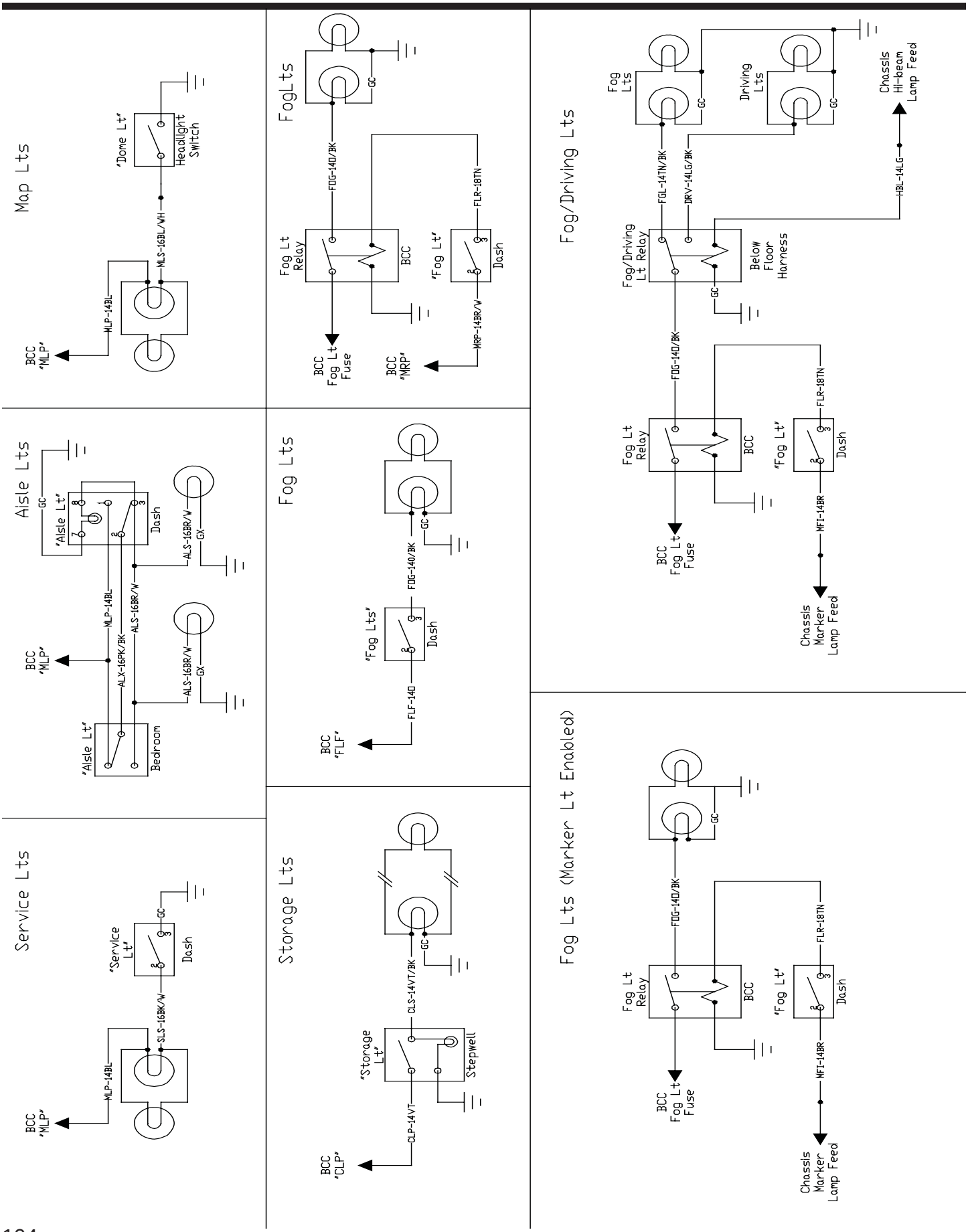

Defrost Blower
"Defrost Fans"
Dash
DFH-16D/BK
DFL-16Y/BK
DFP-14D/R
N/C
GC
BK
BCC "DFP"
Defrost Fans
"Defrost Fans"
Dash
DFH-16D/BK
DFL-16Y/BK
DFP-14D/R
GC
BK
BCCor OEM Interface "DFP"
Trumpet/Air Horns
Trumpets/ Airhorn Solenoid
"Air Horn"
Dash
Horn Relay
Cockpit Harness
AHN-14PK/BK
ARG-18GY
AHP-14PK
HRN-14DG
GC
BCC "AHP"
Chassis Horn
Electric Visor (Dual Control)
"Passenger Visor"
Passenger Pod
"Passenger Visor"
Cockpit
VEF-16PK
VXI-16R
VXO-16R/BK
VPI-16VT
VPO-16VT/BK
GC
BCC "VEF"
Electric Visor (Single Control)
"Driver (Passenger) Visor"
Cockpit
VEF-16PK
VDI-16GN (VPI-16VT)
VDO-16GN/BK (VPO-16VT/BK)
GC
BCC "VEF"
Electric Step
Electric Step Motor Controller
A
B
C
D
R
Y
BR
W
ESP-10R
ESD-16BR
ESI-16Y
ESE-16W/R
ESS-16W/BL
Magnet Switch
Stepwell
"Elec. Step"
Stepwell
GC
BCC "ESP"
BCC "ESI"
BCC "ESS"
Electric Slideroom
Slideroom Motor Controller
+
-
M1
M2
IN
OUT
Slideroom Enable Relay
On Firewall
SDR-10R
SDR-10R
SDP-10R
SDP-10R
ESI-16Y
GC
SDI-14D
SDO-14BL
"Slideroom"
Hallway
Key Switch
Hallway
SKF-14GN
HPE-14VT
Chassis "SDP" Or "SDP"
BCC "ESI"
House "E"
Electric Step-cover
BCC "SCP"
SCP-10GN
Slide-cover Retract Relay
Slide-cover Extend Relay
On Firewall
Rear Limit
Step-cover
SSR-16D
SCR-16D/BK
CM2-10Y
CM1-10R
SCE-16BL/BK
Emergency Stop
Step-cover
"Elec Step Cover"
Passenger Pod
SSR-16D
SSE-16BL
SXE-16BK
Front Limit
Step-cover
GC

Electrical Diagrams

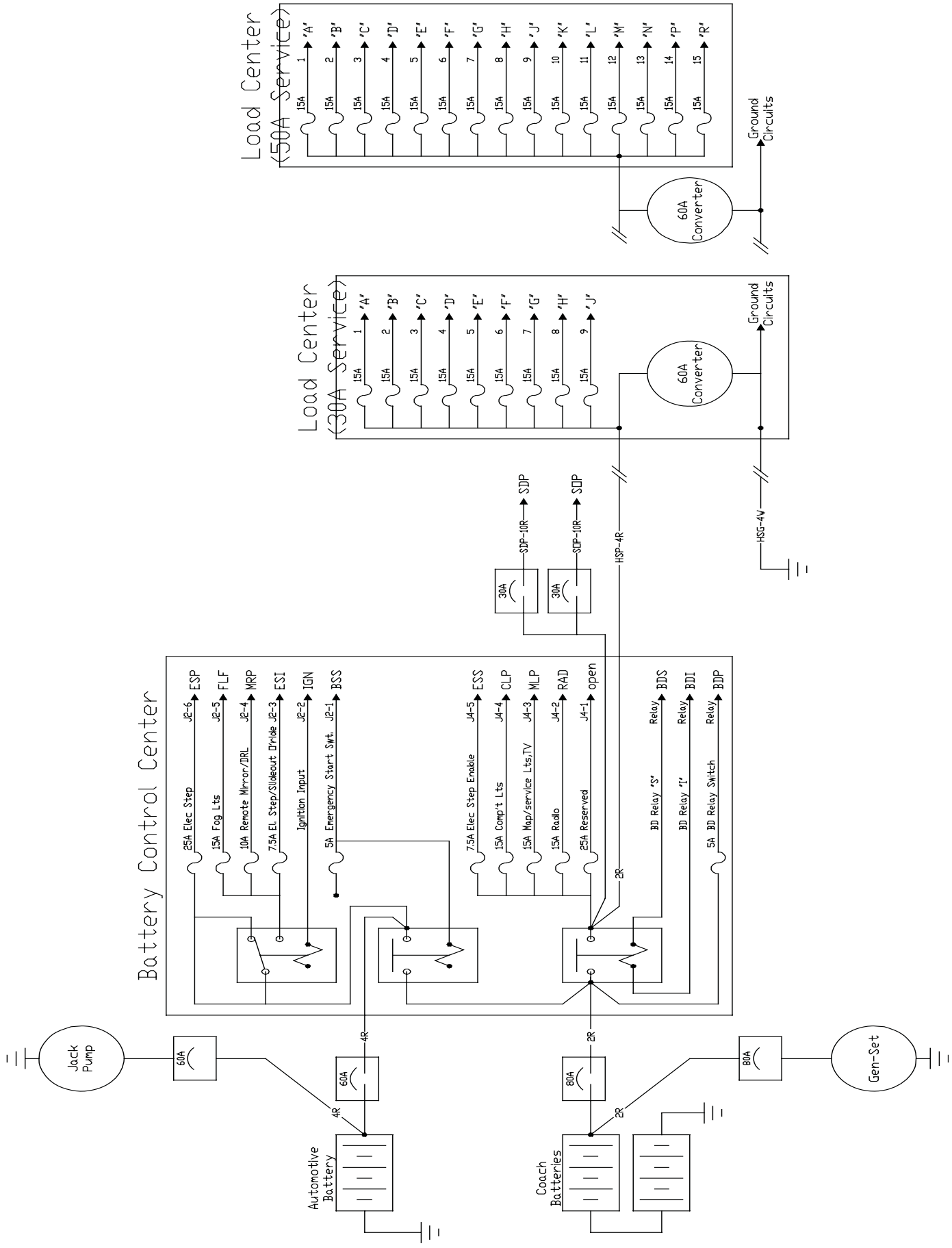

Marker Lt Flash
From Headlight Switch Marker Lt Feed
MFI-14BR
"Marker Flash"
Dash
MFD-14BR/WH
To Chassis Marker Lt Circuits
MKR-14BR (MFD-14BR/WH)
Clearance Lts
GC
Remote Electric Mirrors w/Heat & Turn Signal
Automotive RH Turn "FTR"
FTR-14DB
MRH-16BR
MRV-16LG
MRC-16DG
RH MIRROR
Automotive LH Turn "FTL"
FTL-14LB
MLH-16LG/R
MLV-16LG/BK
MLC-16DG
LH MIRROR
Remote Mirrors Controller
LG/Y
BK
MRF-16BR/BK
3A
"Mirror Heat"
Driver Pod
MRP-14BR/W
BCC "MRP"
OEM Illumination "LPS"
Wiper/Washer (Diesel)
Washer
Wiper
WWF-12BK
WWL-12GN
WWH-12R
WWP-12BL
WSN-14BR
On Firewall
Wiper Control Relays
WRX-14PK
WRH-18VT
WRL-18Y
BCC "WWF"
OEM Illumination "LPS"
Wiper/ Washer Controller
LPS-18DG
Remote Electric Mirrors
Diesel Generator
GSC-16BR
GSI-16D
GSR-16R
GSS-16GN
GSH-16BL
"Generator"
Dash
Hourmeter
Note; Additional Remote Switches are Identically Wired.
Gas Generator

Electrical Diagrams

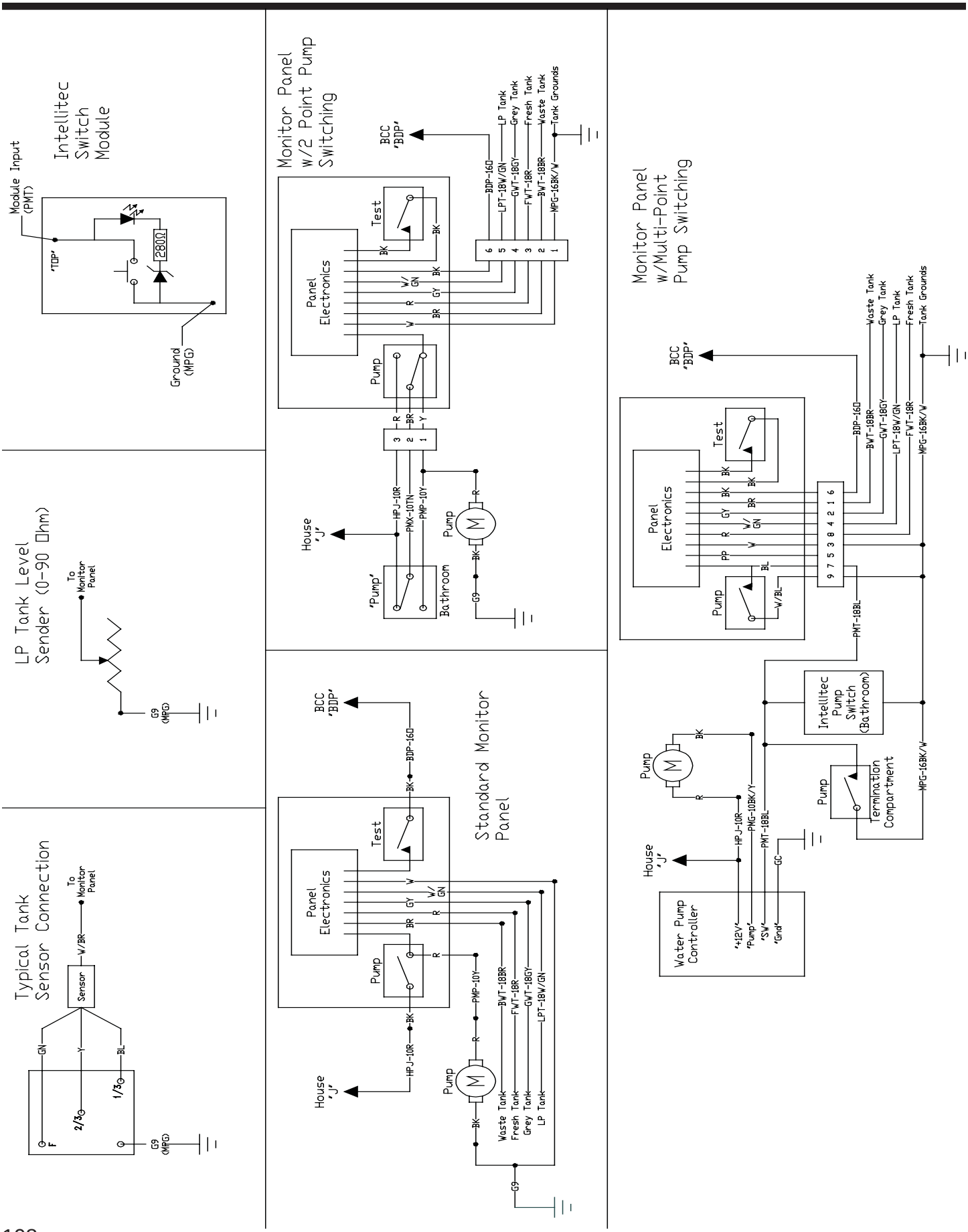

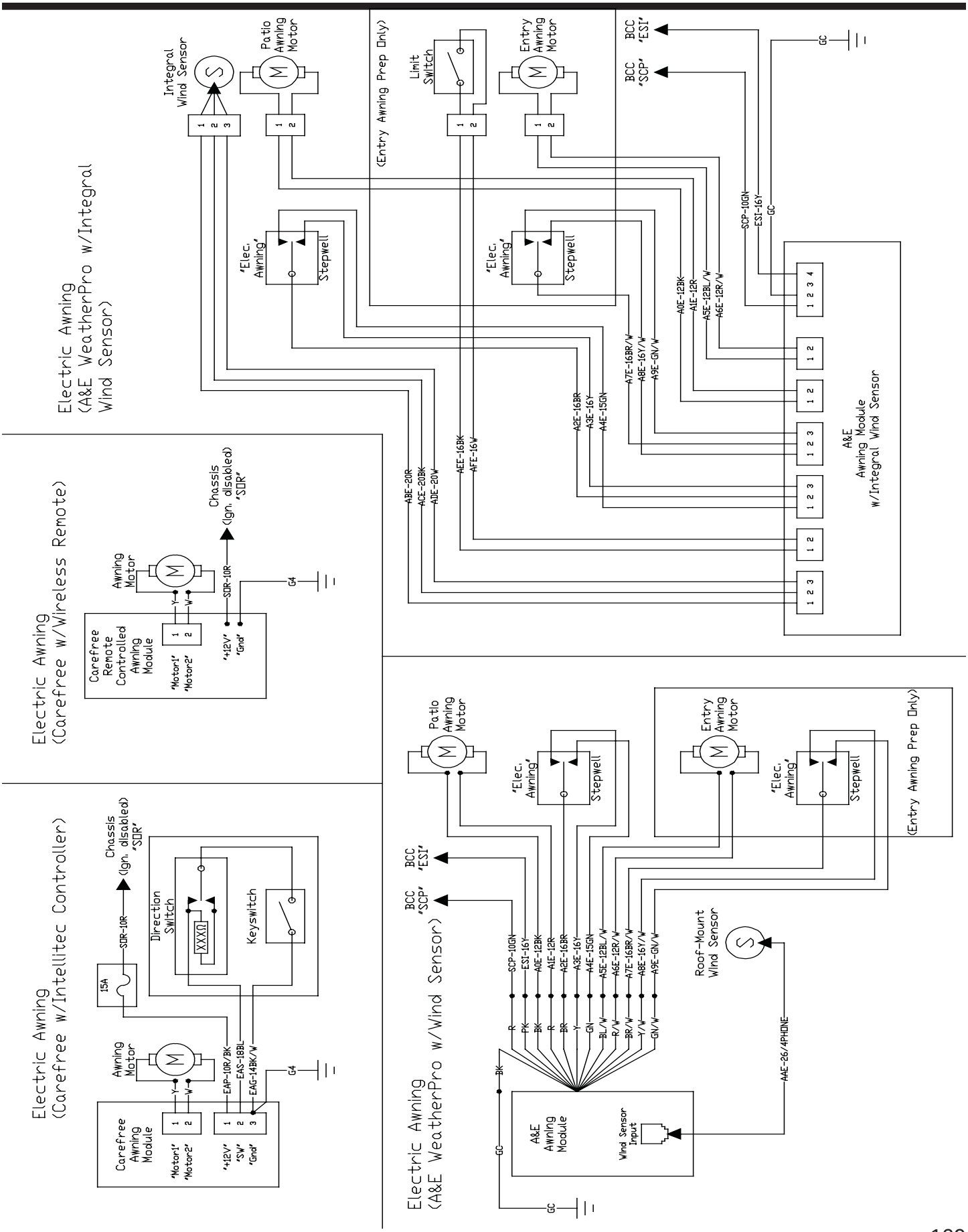
Electric Awning
(A&E WeatherPro w/Integral
Wind Sensor)
Integral
Wind Sensor
Patio
Awning
Motor
Limit
Switch
Entry
Awning
Motor
(Entry Awning Prep Only)
BCC
"ESI"
BCC
"SCP"
GC
"Elec.
Awning"
Stepwell
SCP-10GN
ESI-16Y
A0E-12BK
A1E-12R
A5E-12BL/W
A6E-12R/W
A7E-16BR/W
A8E-16Y/W
A9E-GN/W
A2E-16BR
A3E-16Y
A4E-15GN
A6E-16BK
A7E-16W
A8E-20R
A9E-20BK
A0E-20W
A&E
Awning Module
w/Integral Wind Sensor
Electric Awning
(Carefree w/Wireless Remote)
Chassis
(Ign. disabled)
"SDR"
Awning
Motor
Carefree
Remote
Controlled
Awning
Module
"Motor1"
"Motor2"
"+12V"
"Gnd"
SDR-10R
G4
Electric Awning
(Carefree w/Intellitec Controller)
15A
Direction
Switch
XXXΩ
Keyswitch
Carefree
Awning
Module
"SW"
EAP-10R/BK
EAS-18BL
EAG-14BK/W
Electric Awning
(A&E WeatherPro w/Wind Sensor)
Roof-Mount
Wind Sensor
A&E
Awning
Module
Wind Sensor
Input
A4E-26/4PHONE
BK
R
PK
BK
R
BR
Y
GN
BL/W
R/W
BR/W
Y/W
GN/W

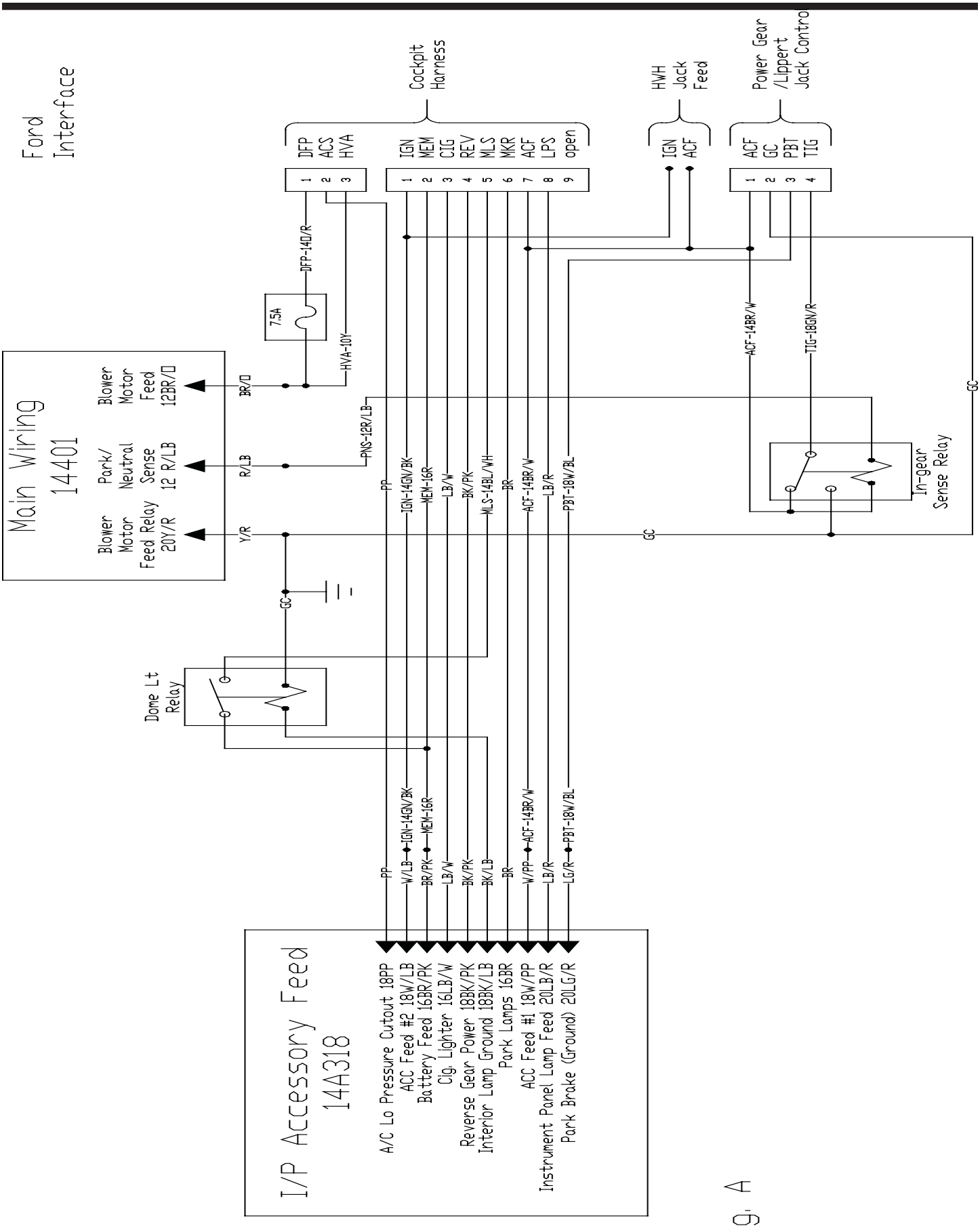
Ford Interface
Cockpit Harness
HWH Jack Feed
Power Gear /Lippert Jack Control
DFP ACS HVA
IGN MEM CIG REV MLS MKR ACF LPS open
IGN ACF
ACF GC PBT TIG
Main Wiring 14401
Blower Motor Feed Relay 20Y/R
Park/ Neutral Sense 12 R/LB
Blower Motor Feed 12BR/O
BR/O
R/LB
Y/R
7.5A
DFP-14O/R
HVA-10Y
PNK-12R/LB
ACF-14BR/W
TIG-18GN/R
In-gear Sense Relay
Dome Lt Relay
GC
PP
IGN-14GN/BK
MEM-16R
LB/W
BK/PK
MLS-14BL/WH
BR
ACF-14BR/W
LB/R
PBT-18W/BL
I/P Accessory Feed 14A318
A/C Lo Pressure Cutout 18PP
ACC Feed #2 18W/LB
Battery Feed 16BR/PK
Cig Lighter 16LB/W
Reverse Gear Power 18BK/PK
Interior Lamp Ground 18BK/LB
Park Lamps 16BR
ACC Feed #1 18W/PP
Instrument Panel Lamp Feed 20LB/R
Park Brake (Ground) 20LG/R
W/LB
BR/PK
W/PP
LG/R

Fig. A

Workhorse Interface
Power Gear /Lippert Jack Control
Leveling Jack Control
Cockpit Harness
ACF
LEN
PBT
TIG
IGN
ACF
IGN
MEM
CIG
REV
MLS
MKR
ACF
LPS
HRN
DFP
open
HVA
1 2 3 4
1 2
1 2 3 4 5 6 7 8 9
1 2 3
Park Brake Switch
PBT-18W/BL
TIG-18GN/R
LEN-18W/D
IGN-14GN/BK
MEM-16R
CIG-14Y
REV-14BK/PK
MLS-14BL/WH
MKR-14BR
ACF-14BR/W
LPS-16DG
HRN-14GN
DFP-14D/R
HVA-10Y
7.5A
PNS-12R/LB
In-gear Sense Relay
RDF-14GN.BK
Convenience Center
C7 C8
C9
D1 D2 D3 D4 D5 D6
D7 D8
E1 E2 E3 E4 E5 E6
F5 F6
A B

Fig. B

Electrical Diagrams

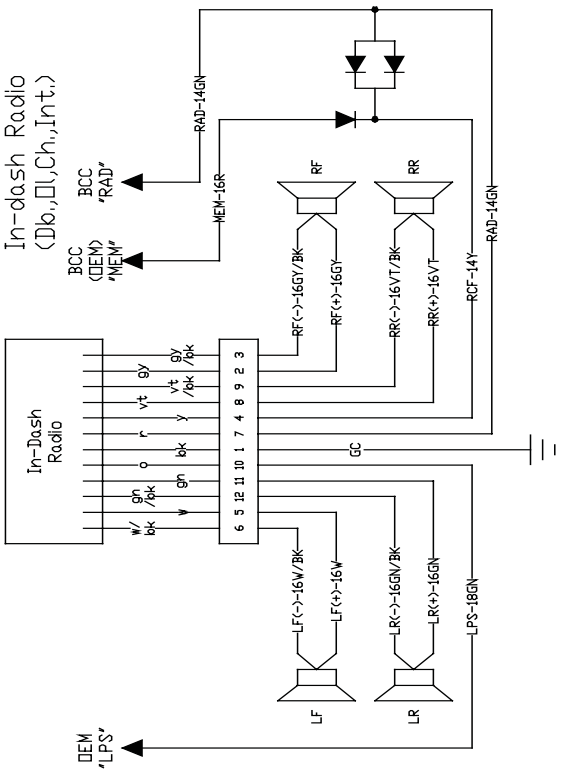

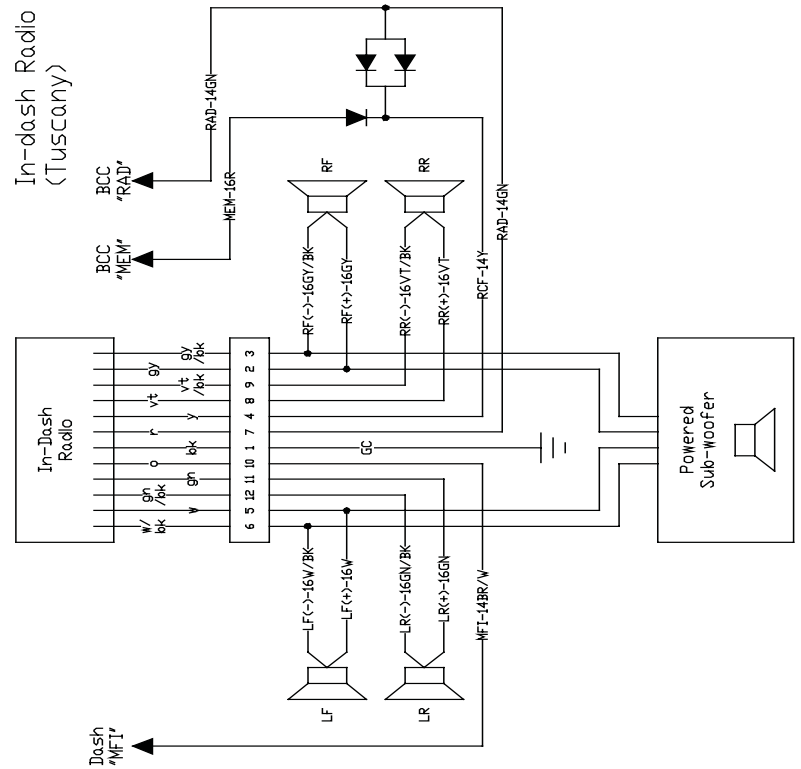

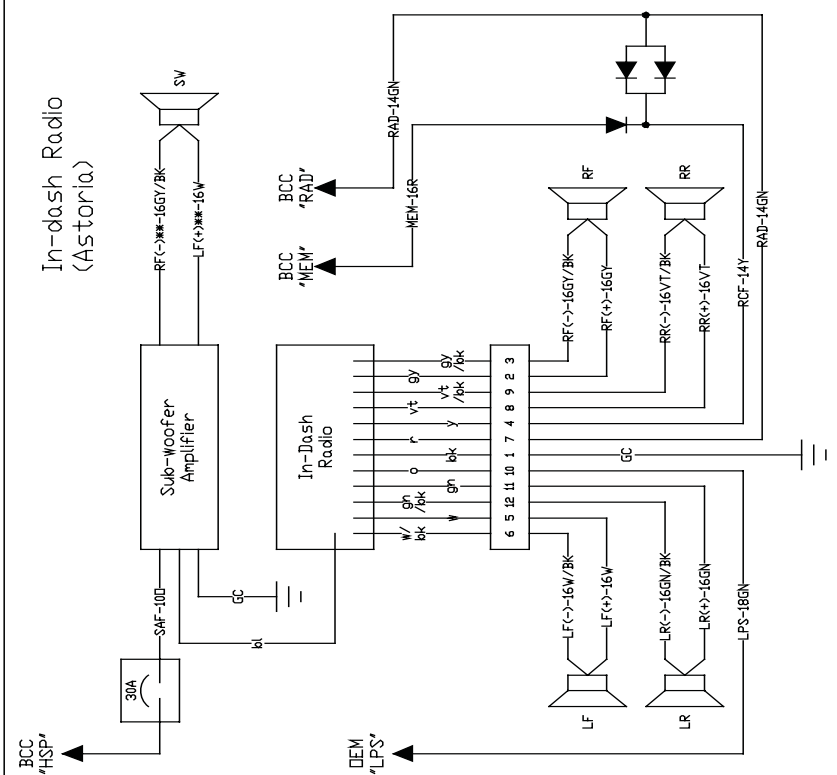

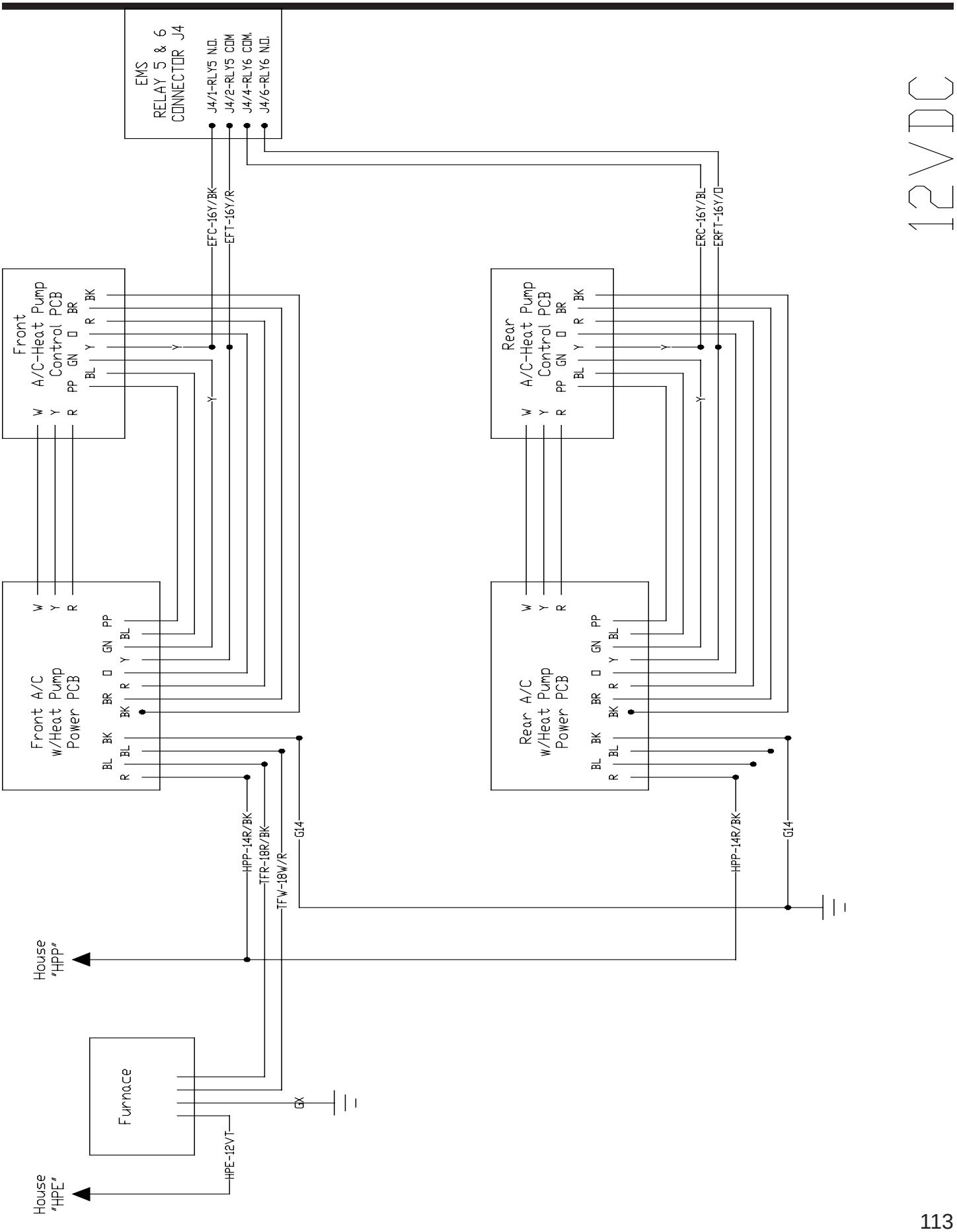
12VDC
EMS
RELAY 5 & 6
CONNECTOR J4
J4/1-RLY5 N.O.
J4/2-RLY5 COM
J4/4-RLY6 COM.
J4/6-RLY6 N.O.
EFC-16Y/BK
EFT-16Y/R
ERC-16Y/BL
ERFT-16Y/O
Front
A/C-Heat Pump
Control PCB
Rear
A/C-Heat Pump
Control PCB
Front A/C
w/Heat Pump
Power PCB
Rear A/C
w/Heat Pump
Power PCB
HPP-14R/BK
TFR-18R/BK
TFW-18W/R
G14
HPP-14R/BK
G14
House
"HPP"
Furnace
GX
HPE-12V/T
House
"HPE"

Electrical Diagrams

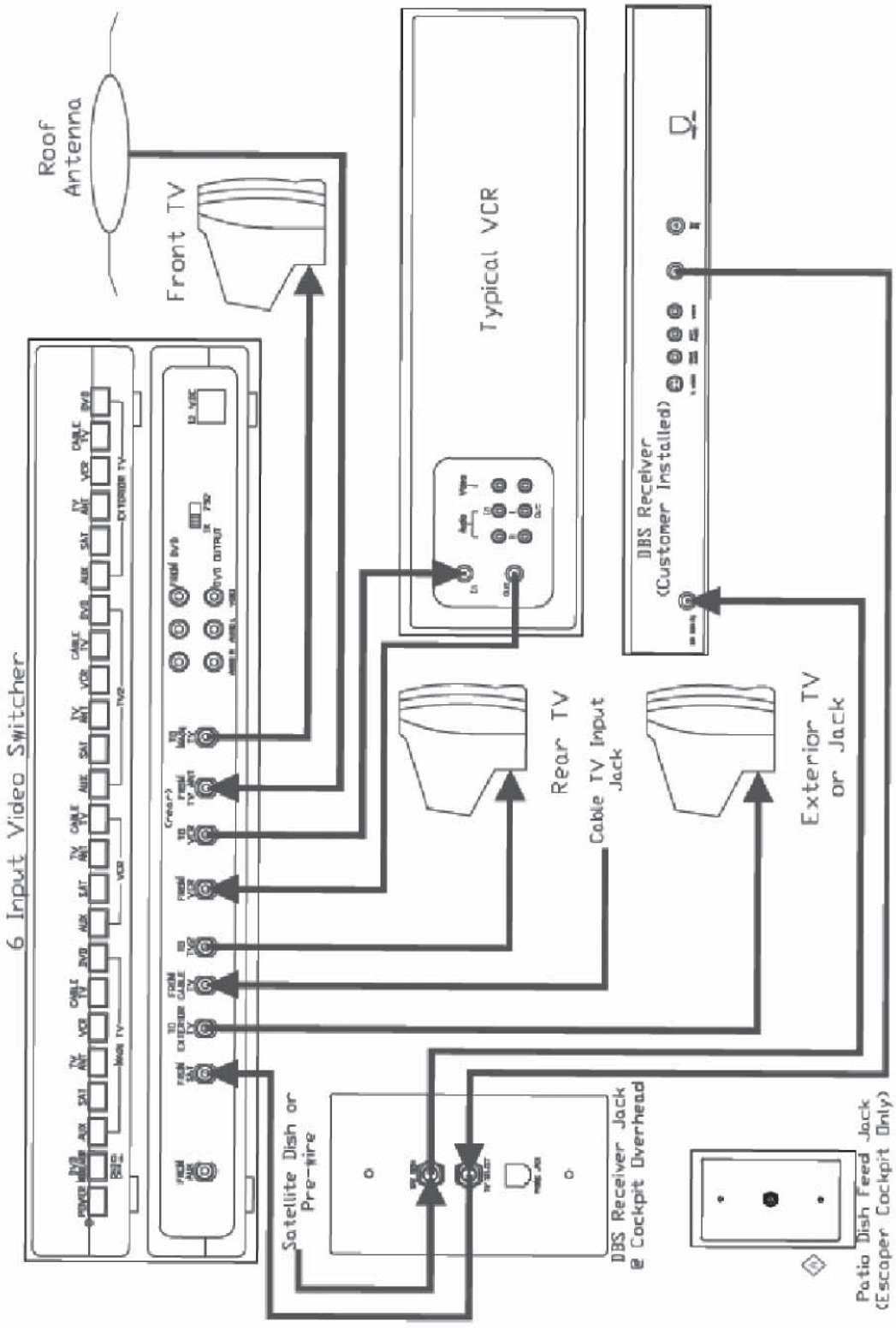

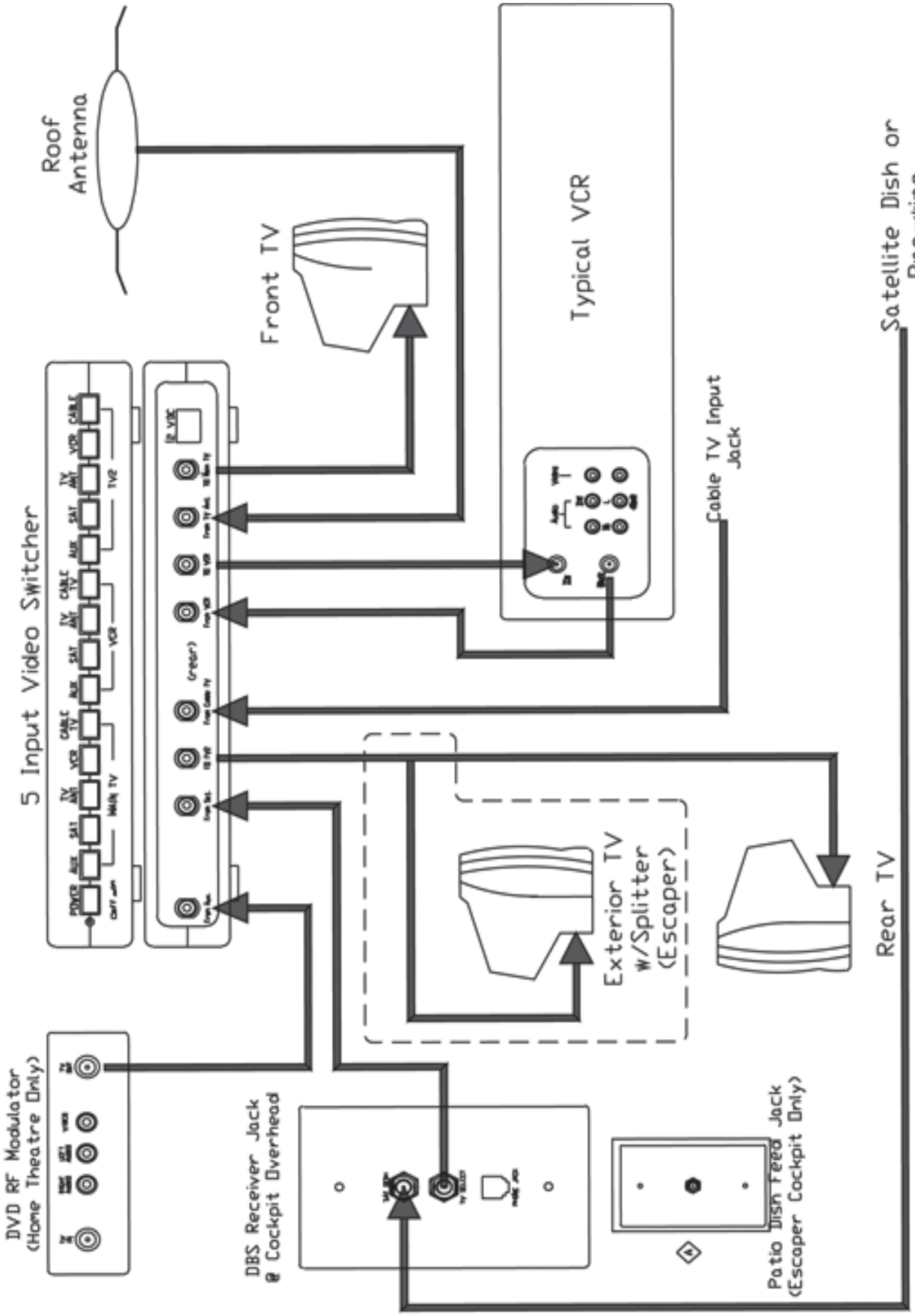
Roof Antenna
Front TV
Typical VCR
Satellite Dish or Pre-Wire
Cable TV Input Jack
5 Input Video Switcher
Exterior TV w/Splitter (Escaper)
Rear TV
DVD RF Modulator (Home Theatre Only)
DBS Receiver Jack @ Cockpit Overhead
Patio Dish Feed Jack (Escaper Cockpit Only)

Electrical Diagrams

Index

120 Volt Outlet 60
2-Way Radio Charging System 56
A/C & Furnace Thermostat 56
ABS Plastic Parts 65
Air Pressure 27
Alignment 65
Appliances 71
Assist Handle 59
Automotive Dash 51
Automotive Fuse Block 60
Awning 59,65
Backup Monitor 53
Bath Fixtures 71
Bath Vent 58
Bathtub Seal 71
Batteries 63
Battery Control Center (BCC) 43,89
Bedroom Door Latch 56
Bedspread & Drapes 71
Cabinets & Drawers 54,56,73
Capacity 22
Carbon Monoxide Precautions 30
Carpet 71
Changing Tires 26
Chassis 66
Chassis Electrical 41
Chemical Sensitivity 33
City Water Hook-up 37
CO Detector 29
Coach Electrical 41
Compartment Doors 59
Condensation 75
Controlling the Motorhome 17
Converter/Inverter 41,93
Countertops 71
Damon Limited Warranty 9
Dash Board Controls 51
Day/Night Shade 56
Dinette Conversion 58
Doors & Door Locks 66
Dumping Holding Tanks 39
Electrical System 64
Electric Entry Step 59
ELECTRICAL DIAGRAMS 99
Electrical Power 89
Emergency Exit 30
Extending the Slideroom 55
Exterior Lights 66
Exterior TV Hook-up 61
Faucet 57
Federal Certification Label 21
Fiberglass 66
Fire Extinguisher 29
Food Storage 75
Formaldehyde 33
Fresh Water Fill / Fresh Water Tank 37
Fresh Water System 64
FUEL / OIL RECORD 85
Fuel System 25
Furnace 60,89
Gear Selector 51
Generator 30,43,60,64,90
GFCI 42
Graphics 67
Hardware 72
Heated Holding Tanks 39
Heating 75
Hide-a-bed Sofa 56
Home Theater Operation 47
Home Theater Programming 46
Home Theater Troubleshooting Tips 49
How to use this manual 8
Hydraulic Fluid 71
INDEX 117
Inspect and Maintain 17
Introduction 7
Kitchen Fixtures 72
Leveling Jacks 53,91
License and Insurance 17
Living Room Television 54
Loading and Weight 17
Low Point Drains 38
Main Entrance 59
MAINTENANCE RECORD 83
MAINTENANCE SCHEDULE 81
Major Equipment Suppliers 16
Medical Advice 33
Microwave 57,92
Mini Blinds & Day/Night Shades 72
Mold 34
Monitor Panel 43,92
NOTES 87
Opening Checklist 19
Outside Receptacle 92

Index

Owner Responsibility 11
Owner Responsibility Checklist 13
Parking 26
Parking Brake 53
Power Cord 60
Pre-travel Checklist 17
Preventing Holding Tank Blockage 40
Prolonged Occupancy 35
Propane Gas 29,92
Propane Regulator 45
Propane Safety 30
Propane System 44,45,65,75
Range 57
Rear Ladder 59
Refrigerator 57,93
Refrigerator Panel 60
Reporting Safety Defects 8
Retracting the Slideroom 55
Roof 68,69
Roof Air Conditioner 44,94
Safety Belts 25
Sanitizing the Fresh Water System 38
Seals & Adhesives 69
Shower Head and Hose 58
Sidewalls 67
Sink 57,72
Slideout 69,95
Smoke Detector 29
Smoking 33
Sofa Bed 56
Solid Surface Countertop 72
Steering Wheel 53
Storage 54
Symbols of Switches 51
Temperature Control 53
Termination Compartment Components 40,95
Tips to Control Condensation 33
Tire Care 27
Tires 70
Toilet 58
Towing and GCWR 23
Trailer Hitches and Towing 23
TRAVEL PREPARATION CHECKLIST 82
TV and Phone Jacks 60
TV Antenna 70,95
Underbody 70
Upholstery & Fabrics 72
Ventilation 33
Wall Coverings 73
Waste Tank 96
Waste Water System 64
Water Heater 56,60,77,96
Water Pump 37,97
Water System 75,97
Wax 67
Weighing Your Motorhome 22
Weight Ratings 20,21
Windows 70
Windows 70,73
Winterization Checklist 78
Winterization Procedure 75

CORRECTION TO 2008 OWNERS MANUAL (page 5)

ADDENDUM 1 TO BOX CONTENTS

SUBJECT: MAP SD CARD

THIS UNIT HAS NAVAGATION CAPABILITIES AND THE SD CARD MUST BE PURCHASED IT IS NOT STANDARD.

A SD-NAVAGATION CARD CAN BE PURCHASED THROUGH DAMON MOTOR COACH SERVICE DEPARTMENT TOLL FREE 1-800-860-3812.

←Navigation Stereo

Damon # 838862

Navigation Card Upgrade→

Damon Part # 838973

DAMON

MOTOR COACH

Damon Motor Coach
P.O. Box 2888
Elkhart, IN. USA 46515-2888
(574) 264-2900

Revised 3/08